Report on the Independent Software Audit of the New Market Management System and the Central Registration and Settlement System

New Market Systems for the Enhanced WESM Design and Operations

OCTOBER 2020

This Report is prepared by the
Philippine Electricity Market Corporation –
Market Assessment Group for the
PEM Audit Committee

The information contained in this document is based on the report submitted by an independent external auditor to the Philippine Electricity Market Corporation (PEMC).

FOREWORD

The PEM Audit Committee (PAC) supervised the independent software audit of the modules of the New Market Management System (NMMS) and the Central Registration and Settlement System (CRSS) including enhancements and fixes, and related tools, systems and applications.

The audits were conducted to validate compliance with the Market Rules and Manuals, particularly the Price Determination Methodology (PDM) Manual, for the enhanced WESM design and operations, and other relevant issuances of the DOE and ERC.

These audits were handled by the Intelligent Energy System (IES), the external auditor commissioned by the PAC. After the conclusion of the audits, IES issued software certificates indicating the compliance with the Market Rules and Manuals, and other relevant issuances of the DOE and ERC for the enhanced WESM design and operations.

The PAC wishes to express its appreciation and gratitude to the management of the Philippine Electricity Market Corporation (PEMC) as well as the auditee, Independent Electricity Market Operator of the Philippines (IEMOP), for the cooperation and support they extended to the auditor for the successful completion of this audit project.

For the PEM Audit Committee,

[redacted]

Felixberto U. Bustos, Jr.
Chairperson

[redacted]

Eduardo Alejandro O. Santos
Member

[redacted]

Christian M. Orias
Member

1. ABOUT THIS REPORT

This report provides an executive summary of the results of the independent software audits of the NMMS and the CRSS for the enhanced WESM design and operations.

2. EXECUTIVE SUMMARY

2.1. Background

The Philippine Government has promulgated Republic Act No. 9136, also known as the Electric Power Industry Reform Act of 2001 (EPIRA), which enabled the restructuring of the Philippines' electricity industry. Through the EPIRA, the Department of Energy (DOE) established the Wholesale Electricity Spot Market (WESM), which serves as a venue for the trading of electricity.

The PEMC served as the autonomous group market operator and governing body of the WESM when it began commercial operations in Luzon in June 2006 and in the Visayas in December 2010. As market operator (MO), PEMC facilitated WESM's operations through an IT infrastructure that is commonly known as the Market Management System (MMS), which is designed based on the provisions of the Market Rules and Manuals, especially the WESM PDM.

On 14 November 2015, the DOE provided policies to enhance the WESM design and operations and thereafter promulgated changes to the Market Rules and Manuals. In 2018, the DOE promulgated transitory provisions for the implementation of WESM in Mindanao. Further, the DOE-approved proposed PDM is currently under hearing by the ERC.

On 28 March 2018, the DOE approved the revised rules on metering requiring the retail metering service providers (MSP) to submit to the DOE and ERC its compliance program, including the rate applications to be filed with the ERC for the recovery of cost, on the upgrading of the Contestable Customers' metering installations within 30 working days from the effectivity of the DOE Department Circular 2018-04-0009. The DOE further required the retail MSPs to comply with the submission of 5-minute meter data to the MO by dividing the current 15-minute interval energy meter data by three (3).

As provided under the revised Market Rules and Manuals, particularly the PDM Manual, the enhanced WESM design and operations involve the following, among others:

Market Design/Operation	Current	Enhanced
1. Dispatch interval	1 hour	5 minutes
2. Consideration of Pmin	Priority dispatch	Submitted as offer
3. Pricing	Ex-ante & Ex-post	Ex-ante only

Market Design/Operation	Current	Enhanced
4. Market re-runs	Manual market re-runs	Automatic pricing re-runs
5. Market projections	Day-ahead projections (DAP) every four (4) hours	• DAP every one (1) hour with sensitivities • Hour-ahead projections (HAP) every five (5) minutes
6. Compliance monitoring	Manual dispatch conformance monitoring	Automatic dispatch conformance monitoring of energy
7. Scheduling/ trading of energy and reserves	Results of central scheduling of reserves are input to energy-only market	Co-optimized energy and reserves
8. Metering	15-minute meter readings aggregated into hourly values for settlement	• 5-minute meter readings • While compliance to using 5-minute meter readings is still in-process by MSPS, 15-minute readings converted to 5-minute meter data
9. Settlements	• One hour interval and resolution • Two-part settlement	• One hour interval and 5-minute resolution • One-part settlement
10. Administered prices	Calculated during settlement	Calculated by NMMS
11. PSM settlement	Adjustments made during settlement	PSM prices by NMMS is binding
12. Must-run unit settlement	GPI plus additional compensation	Market price plus additional compensation

Such enhancements to the WESM design and operations were incorporated into the design of the NMMS for the scheduling and pricing of energy and reserves, and the CRSS to facilitate the integrated registration and settlement for the wholesale and retail markets.

The PEMC engaged the services of IES to perform an extensive audit of specific NMMS modules to validate its conformance with the Market Rules and Manuals for the enhanced WESM design and operations. The figure below shows an overview of the modules of the NMMS, including their interfaces with other system components:

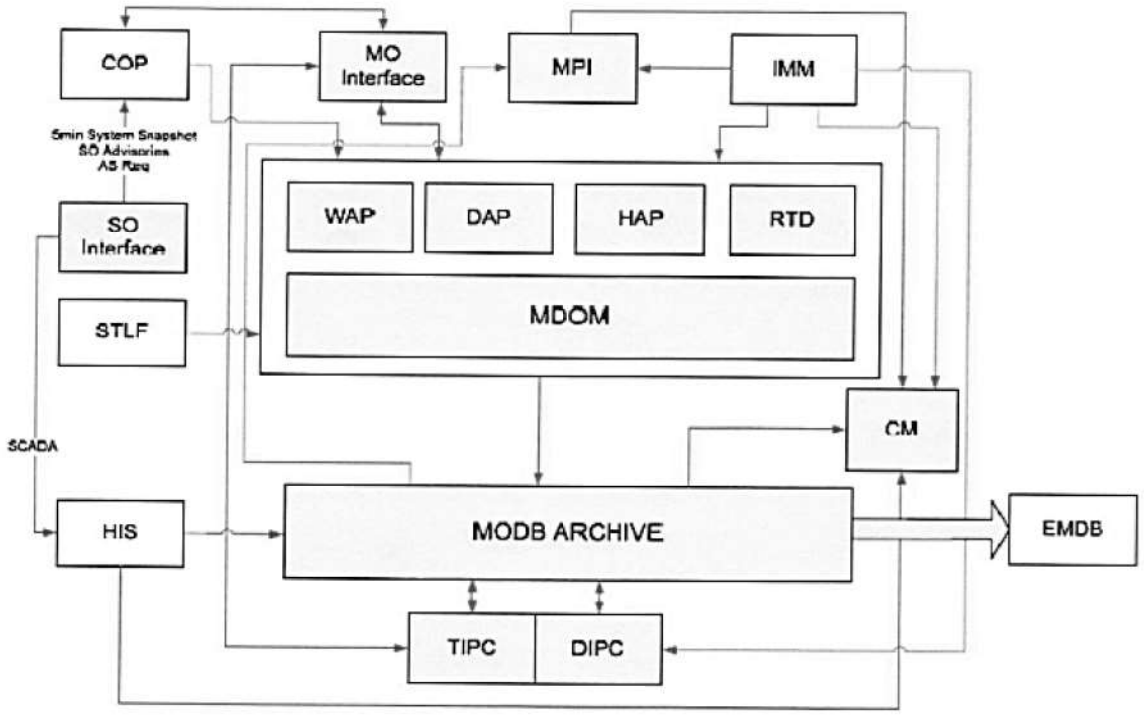

Figure 1 Overview of Major NMMS Modules

On 26 September 2018, PEMC transferred its functions as MO to the IEMOP, while retaining its role as the WESM governing body through the PEM Board and its WESM Governance Committees, upon the endorsement of the DOE and the electric power industry market participants.

After the transition, the audit project continued with the IEMOP as the auditee, and supervised by PEMC through the PAC.

2.2. Scope of NMMS Audit

The audit of the NMMS focused on the following modules:

1. **Market Dispatch Optimization Algorithm**. Determine if the mathematical algorithms used are mathematically equivalent to the formulation described in the proposed PDM Manual.

2. **Market Projections and Real-time Dispatch Runs**. Determine if the processes in executing the week-ahead projection (WAP), DAP, HAP and real-time dispatch (RTD) conform to the relevant provisions of the proposed Market Rules and Manuals.

3. **Market Participant Interface (MPI).** Determine if the interface for market participants employs schemes, particularly involving the bid validation rules, that are consistent with the provisions of the proposed Market Rules and Manuals.

4. **Compliance Monitoring (CMON).** Determine if the process for determining dispatch compliances for energy dispatch and reserve response conforms to the proposed dispatch conformance standards that is stated in the relevant Market Rules and Manuals.

5. **Post-Market Run Calculations.** Determine if the applications for the post-processing of real-time spot prices are consistent with the PDM Manual.

6. **Forecast.** Determine if the applications for determining regional and nodal load forecasts conform to the objectives of providing accurate net load forecasts as provided for the Market Rules and Manuals.

7. **Financial Transmission Rights (FTR).** Determine if the design intended for FTR is consistent with the relevant business requirements document and design documents of the NMMS project.

8. **Market Publications.** Determine if the required information are published consistent with the timelines proposed in the relevant provisions of the Market Rules and Manuals.

The audit was done per module and completed in stages taking into account the availability of the relevant modules for audit and the iterative process of addressing audit findings and re-testing. The summary of approval and acceptance of final audit reports and software certificates submitted by IES for the independent software audit of the NMMS modules are as follows:

NMMS Module	PAC approval and acceptance date
C3 – MPI	September 2018
C5 – PMRC	September 2018
C8 – Market Operations Archiving Repository (MOAR)	January 2019
C2 – Market Projections	February 2019
C1 – Market Dispatch Optimization Model (MDOM)	March 2019
C4 – CMON	August 2019
C6 – Load Forecasting	November 2019

To date, the audit of the remaining module, C7 – FTR, has not commenced in the absence of appropriate policy framework. Also, the audit of the critical NMMS modules and additional

enhancements and fixes to the NMMS and CRSS, covered in two (2) supplemental audits, were prioritized in line with the commercial operation of the enhanced WESM design.

2.3. First Supplemental Audit

2.3.1. Background

The first CRSS audit completed in January 2018 only covered five (5) critical modules and associated interim tools, and IEMOP implemented enhancements to comply with relevant DOE issuance[1]. The IEMOP likewise implemented enhancements and fixes that affected the audited NMMS modules. The PAC reviewed the changes made to the NMMS and CRSS to address the concern raised under the Market Readiness Assessment (MRA) activity that the patches, workarounds and tweaks introduced into the market systems may invalidate the NMMS and CRSS certification. These updates were presented by IEMOP to the PAC during the PAC Meeting held on 20 June 2019. The IEMOP also presented the NMMS fixes including timelines of said fixes during the Market Readiness Steering Committee (MRSC) meetings held on August 8 and 27, 2019.

While the PAC initially deemed the NMMS enhancements/fixes and CRSS modules/enhancements to undergo post-audit, together with all other market operations, systems, and processes as part of the 7th MO Audit, the PAC decided during its meetings on 08 and 19 August 2019 to push through with the pre-audit to ensure the accuracy and compliance of the scheduling, pricing, and settlement calculations in said systems.

On 10 September 2019, the IEMOP informed PEMC of the need to audit its Trading Operations Central Management Systems (TOCMS), specifically, the modules on load forecasting and computation of the Load Distribution Factor (LDF). In accordance with Section 10. 2 of the PEM Audit Manual, PEMC and PAC deemed that the TOCMS and similar software/tools/applications should be audited prior to the commercial operations of the enhanced WESM design and operations.

On 16 September 2019, the IEMOP formalized its request through a letter to PAC, specifically inquiring whether the TOCMS and the interim metering macro tools, which affect the accuracy of WESM's pricing, scheduling, and settlement process, should undergo pre-certification audit. The PAC deemed that these application and tool should be included in the scope of the pre-audit under this document.

[1] First CRSS Audit was reported in PAC Audit Summary Report on the Independent Software Audit of the CRSS (September 2018)

2.3.2. Scope of Review

The audit focused on the review of the NMMS enhancements/fixes, CRSS modules and enhancements, and Software/Tools/Applications that are relevant to generation scheduling, dispatch, price calculation or settlement, as follows:

NMMS enhancements	**Affected NMMS module**
Switchable Use of SCADA for Market Applications (SUSMA)	MDOM
Separate Workflow for RTD-HAP Substitution	Market Projections and RTD Runs
Mindanao Separation of Prices	PMRC
Market Re-Run	MRR (new)
Enhancements on the MPI	MPI

NMMS fixes	**Affected NMMS module**
WAP/DAP/HAP failure when generator has simultaneous reserve offer and security	Market Runs MDOM
Generator is being scheduled in WAP/DAP/HAP market runs even with no offer nor security limit	Market Runs
No HVDC data in WAP/DAP/HAP/RTD CSV files	Market Runs
Use of Energy Component in PSM unconstrained MCP	PMRC
Extremely high prices even after automatic re-run	MDOM
DAP/HAP runs are encountering MIP infeasibility error	MDOM
HVDC error in market runs resulting to its zero MW schedule	MDOM
Inconsistency in data published in MOAR vs. CSV files	MOAR
XML nominations do not match input data in MPI	MPI

CRSS Modules/ Enhancements	**Affected CRSS module**
Registration and customer switching	Registration
Submission of BCQ declarations	Data Exchange
MQ data upload and Meter Trouble Report (MTR) enhancements	Data Exchange Meter Data Warehouse
Separate Settlements for Mindanao	Settlement
Settlement Statements	Settlement
Prudential Requirements (PR) Monitoring	PR

Software/Tools/Applications	Description
TOCMS • Module on Load Forecasting • Module on Computation of Load Distribution Factor (LDF)	• Load forecasts that can be used by MO, if necessary • Computation of the LDF, which shall be used for determining the nodal load forecasts
Interim Metering Macro Tools	Computation of site-specific loss adjustment for 5-mintue dispatch interval market

The summary of PAC approval and acceptance of final audit reports and software certificates submitted by IES for the **first supplemental** independent software audit of the NMMS and CRSS are summarized below:

Audit Scope	PAC approval and acceptance date:
NMMS Enhancements and Fixes	September 2020
CRSS Modules and Enhancements	January 2020
Interim Metering Macro Tools and the NSS Tool	January 2020
Separate Settlements for Mindanao and Settlement Statements	May 2020
TOCMS Nodal LDF and Very Short-Term LDF	May 2020

2.4. Second Supplemental Audit

2.4.1. Background

The certification of the NMMS-Load Forecasting module was completed in November 2019 and submitted to the ERC. The IES appeared as expert witness for the NMMS certification audit during the PDM hearings held on 04 and 05 December 2019. During the said hearings, the ERC directed PEMC to conduct additional testing on the NMMS-Load Forecasting module using the latest three (3) month available data.

The PAC was informed of the ERC directives during its meeting on 06 December 2019. With the agreement of PEMC, IEMOP and PAC, IES was requested to conduct the audit as supplemental to the contract of the NMMS audit.

2.4.2. Scope of Review

Specifically, the following are added in scope areas of testing:

1. Reassessment of DAP and WAP nodal load forecasts for Luzon and Visayas using 3-months' worth of data (26 October 2019 to 25 January 2020)

2. Assessment of RTD, HAP, DAP, and WAP nodal load forecasts for Mindanao

The final audit reports and software certificates submitted by IES for the reassessment of DAP and WAP nodal load forecasts for Luzon and Visayas was approved and accepted by PAC in March 2020, while the one for the assessment of RTD, HAP, DAP and WAP nodal load forecasts for Mindanao was approved and accepted in June 2020. Both audit reports and software certificates were submitted to the ERC as part of the compliance to the ERC directive.

2.5. Recommendations

The table below provides the summary of IES recommendations following the audit of the NMMS modules:

Item	Component	Recommendation	Auditor Type of Recommendation
1	MDOM	Modelling of Transmission Losses	Monitoring
	MDOM		Design Change
2	MDOM	Improve management of N-1 contingencies for generators, loads, and HVDC	Best Practice
3	MDOM	Implement some measures that enable the MDOM to manage reserve services for some generating units that require minimum energy dispatches for those services to be delivered (note this is not the same as implementing non-zero energy Pmins for all units)	Best Practice
4	MDOM	Aim to implement a version of the MDOM in the WESM which also co-optimizes system and zonal reserve requirements (this is important for the optimal dispatch of large units and the dispatch of the HVDC as it might be cheaper to reduce their dispatch and reduce the corresponding system or zonal reserve requirements)	Best Practice
5	MDOM	Enhance the MDOM's re-run pricing methodology so that the re-run prices always reflect a shortage or excess (this may also require some minor changes to the PDM's approach to constraint relaxation)	Design Change
6	MDOM	Take measures to ensure that the systems are set up such that the MDOM can be quickly provided with voltage schedules, when the SO needs to use a wider range of voltages than normal, to avoid some of the problems encountered in the test cases.	Process Improvement
7	PMRC	Improve documentation	Documentation
8	MPI	Improve usability of user interface	Process Improvement

Item	Component	Recommendation	Auditor Type of Recommendation
9	Market Runs	The MDOM's solve parameters (numbers of iterations, convergence tolerances etc.) should be the same for each process (RTD, HAP, WAP and DAP) to avoid possible inconsistencies.	Process Improvement
10	Market Runs	The Siemens' dispatch processes (RTD, HAP, DAP and WAP) should be configured to permanently archive the objective function in historian for each run.	Process Improvement
11	Market Runs	The lower and upper limit fields reported as part of the HAP, DAP and WAP schedules should reflect the actual capability of the plant as there is currently an issue with it reporting incorrect values. IES note this is only a reporting issue and does not affect the actual scheduling of the unit/s.	Process Improvement
12	Market Runs	The schedules from RTD, HAP, DAP and WAP should rectify rounding errors (4th decimal place) which can present itself as violations to ramp rates. IES understand this is a minor issue as prices and MW amounts are displayed at 2 and 1 decimal places respectively.	Process Improvement
13	CMON	Improve documentation	Documentation
14	Forecast	• The quality of input data that is used in the demand forecasts, specifically the SCADA and ICCP system, are beyond the scope of this report, however, it is of note an area for possible future improvements. • Investigate and improve the management of real-time data and information that is used by the demand forecasts to minimize data issues and failure of load forecast runs • Continuous monitoring and improvement of the demand forecasts.	Process Improvement Process Improvement Process Improvement
15	Forecast	Integrate a manual override where the forecast can be immediately adjusted proportionately to align with actuals.	Process Improvement
16	Forecast	Consider the use of time-series / naïve forecasts to improve the accuracy of nodal forecasts – it would seem that time series models could significantly improve the accuracy of the demand forecasts; and	Process Improvement

As part of its mandate, the PAC shall monitor the action plans of IEMOP to address these recommendations.

2.6. Conclusion

After the conduct of audit, it was found that the following have been found to be compliant with the Market Rules and Manuals, relevant design documents, and relevant DOE and ERC issuances:

1. NMMS modules, including the additional enhancements and fixes, and testing of Load Forecasting module;

2. CRSS modules and enhancements; and

3. Software/Tools/Applications enhancements.

In view of this, IES has accordingly issued software certifications attesting to the compliance with the Market Rules and Manuals and relevant DOE and ERC issuances. (see software certificates in Appendix A, Appendix B and Appendix C)

Appendix A.1 – Software Certificates for Audit of NMMS Modules

SS

IES
Intelligent Energy Systems

4 February 2019

Mr. Felixberto U. Bustos, Jr.
Chairman, PEM Audit Committee
Philippine Electricity Market Corporation
18/F Robinsons Equitable Tower
ADB Avenue, Ortigas Center
1600 Pasig City, Philippines

Dear Mr. Bustos

SCOPE OF THIS CERTIFICATE

The purpose of this software certificate is to confirm that the Market Dispatch Optimisation Model (MDOM) is consistent with the calculations and logic specified in:

- WESM Rules,
- Price Determination Methodology (PDM) Manual V1.0, and
- Requirements for MDOM specified in the new market management system (NMMS) tender documents (BRD-RFC.1407-027-1411.015).

The areas of MDOM's functionality that were tested were as follows:

- Energy dispatch;
- Energy dispatch and modelling of losses;
- Energy dispatch with system energy shortage;
- Energy dispatch with nodal energy shortage;
- Simple islanding;
- Co-optimization of energy and reserves (but not co-optimization of global and zonal reserve requirements);
- Co-optimization of energy and reserves when there are minimum loading levels for reserves;
- Co-optimization of energy and reserves with reserve shortage;
- N-1 dispatch for network contingencies;
- N-2 dispatch for network contingencies;
- N-1 dispatch for generation contingencies;
- Branch group constraints without HVDC;
- Renewable energy (RE) generation;
- HVDC links;
- N-1 dispatch for HVDC link contingencies; and
- Co-optimization of energy and zonal reserves.

CERTIFICATION TESTING METHODOLOGY

The general approach we adopted for testing the MDOM was as follows:

- We developed a set of test cases in consultation with PEMC/IEMOP to test various aspects of the MDOM. We carefully constructed test cases to check to see whether the MDOM was implementing what was intended, that is, finding the optimal dispatches, correct marginal prices and whether these were compliant with the WESM Rules.
- We provided PEMC/IEMOP with test cases to confirm / check specific functional requirements of the MDOM.
- We checked the MDOM's results with what was expected and reported the results to PEMC/IEMOP.
- If there were discrepancies between the MDOM's results and what we expected, we analysed the reasons for any differences and on some occasions revised the test cases.
- When the MDOM failed a test, PEMC/IEMOP reported the variance to Siemens. Once the variance was fixed and PEMC/IEMOP had re-run the test case, we then checked the results to see if the variance had been fixed. Sometimes there were multiple iterations through this process.

Because the MDOM manages power system security by iterating between the optimisation (SCDD) and power system tools (NA) in a tightly coupled suite of software, our testing had some focus on test cases that would investigate this iteration. In particular, our testing of the MDOM had to examine how well the MDOM modelled losses and managed power system security, including network constraints, as well as how well it determined dispatches and prices.

Our approach to testing the MDOM was to create targeted test cases which addressed specific aspects of the MDOM's functionality. To facilitate this approach, we developed an optimisation model that integrated a dispatch optimisation and an AC power flow into a single optimisation. With this model we determined the exact solutions for smaller scale test problems and compared MDOM's results against best international practices. This approach provided the basis for our findings and recommendations on N-1 dispatch for generation contingencies and N-1 dispatch of HVDC links.

We used our independent optimisation model to solve our test cases and provide expected results with which to check MDOM's results.

CERTIFICATION OF NMMS MDOM SOFTWARE MODULE WITH RESPECT TO REFERENCE DOCUMENTATION

The following is our certification of the extent to which the MDOM is consistent with the:

- WESM Rules,
- Price Determination Methodology (PDM) Manual V1.0, and
- Requirements for MDOM specified in the new market management system (NMMS) tender documents.

"We believe that the MDOM is generally consistent with the:

- *WESM Rules,*
- *Price Determination Methodology (PDM) Manual V1.0, and*
- *Requirements for MDOM specified in the new market management system (NMMS) tender documents.*

However, there are some potential risks in some areas that the MDOM does not always find the optimal solution or correctly determine shortage and excess prices, these are discussed in our audit report Component 1: Market Dispatch Optimisation Model (MDOM) Testing and include the:

- *Modelling of transmission losses:*
  - *the ABB MDOM uses the same algorithm which also has the same potential issue;*
- *Co-optimisation of reserves when one or more units require a minimum energy loading level to be able to provide a reserve:*
  - *although the Siemens system models reserves better than the ABB MDOM, this is still potentially a serious issue and should be fixed using one of the approaches suggested in the Component 1: Market Dispatch Optimisation Model (MDOM) Testing report or via some other appropriate method before the WESM starts the co-optimised reserve market;*
- *Re-run prices do not always reflect shortage pricing when there is a shortage of energy or reserves at a nodal or regional level or excess pricing when there is an excess of generation at a nodal level;*
  - *this is partly due to the inconsistency in the PDM between its specification of the re-run relaxation methodology and its requirement that shortages or excesses should result in prices at the offer cap or floor respectively;*
- *N-1 dispatch for generation contingencies:*
  - *this is potentially a serious issue which also is not addressed in the ABB MDOM and should be fixed;*
- *Dispatch of HVDC links:*
  - *the main problem is that the MDOM does not optimally dispatch one or more HVDC lines when the HVDC lines are in a meshed network* in the same region *but this is not the current situation in the WESM so this is not an immediate issue for the WESM; and*
- *N-1 dispatch of HVDC links:*
  - *this is potentially a serious issue which also is not addressed in the ABB MDOM and should be fixed, though it should be noted that the SO currently does not impose HVDC contingencies on MDOM.*

The areas of test failures that the Siemens' MDOM has exhibited are also present in the ABB MDOM. However, the Siemen's MDOM is far superior to the ABB MDOM with its automatic pricing reruns when there are constraint violations and as a result, the WESM will avoid a large percentage of its pricing error notices. In conclusion, even though some areas of the MDOM present potential problems (as listed above), the system overall is a

material improvement on the ABB MDOM in terms of implementing and complying with the new WESM Rules.

As it is, the Siemens' MDOM would be suitable to replace the ABB MDOM in commercial operation since in all aspects that were tested, it performs at least as well as ABB's MDOM, though the potential problem with minimum loading levels should be addressed before starting the co-optimised reserve market and the suboptimal way that HVDC and generator contingencies are managed should be addressed in the normal course of upgrades of MDOM".

LIMITATION OF LIABILITY

In furnishing this certification, Intelligent Energy Systems specifically limits its liability in accordance with Clause 5.08 (b) of the Contract for External Audit Services (Independent Software audit of the New Market Management System) dated 17 February 2017, and that no person shall be entitled to claim against Intelligent Energy Systems, any losses or damage whether indirect, special or consequential, in excess of that limitation, and PEMC shall ensure that all persons or parties who may rely on this certification are aware of this limitation of liability.

Yours sincerely



Hugh Bannister
Chairman and CEO

IES
Intelligent Energy Systems

15 February 2019

Mr. Felixberto U. Bustos, Jr.
Chairman, PEM Audit Committee
Philippine Electricity Market Corporation
18/F Robinsons Equitable Tower
ADB Avenue, Ortigas Center
1600 Pasig City, Philippines

Dear Mr. Bustos

SCOPE OF THIS CERTIFICATE

This software certificate relates to Component 2 of the Wholesale Electricity Spot Market (WESM) New Market Management System (NMMS) audit relating to the Market Dispatch Optimization Model (MDOM) market projections. The software testing specifically focused on assessing whether the Real-Time Dispatch (RTD), Hour-Ahead Projection (HAP), Day-Ahead Projection (DAP), and Week-Ahead Projection (WAP) processes conform to the relevant provisions of the proposed WESM Rules and Manuals (where they existed) and also whether or not projections of RTD outcomes (HAP, DAP and WAP) are consistent with the RTD, given no uncertainties in input data (like load forecasts and the network model) were made.

This letter certifies that the RTD, HAP, DAP and WAP outputs are mutually consistent, under the testing methodology, and conforms to the requirements in the WESM Rules and Manuals. Specifically, this certifies that the market projection processes (HAP, DAP and WAP) and Real-Time Dispatch are consistent with the relevant clauses of Chapter 3 of the WESM Rules, and Section 8 of the Dispatch Protocol Manual Issue No.13, where it specifies that the MDOM is required to be used for RTD, HAP, DAP and WAP processes[1].

Furthermore, we have checked and certify that the NMMS MDOM DAP component computes projections of nodal prices and generator schedules for five cases: (1) Base Case Demand Forecast, (2) Base Case Demand Forecast +3%, (3) Base Case Demand Forecast -3%, (4) Base Case Demand Forecast +5%, and (5) Base Case Demand Forecast -5%,

CERTIFICATION TESTING METHODOLOGY

The scope of Component 2 testing was to assess whether the HAP, DAP and WAP processes were working and consistent under the concept that HAP, DAP and WAP are projections of RTD, all else being equal. In particular, by eliminating uncertainties in the input data (due to demand forecasts and/or generation availability and offers) used in the HAP, DAP and WAP, the same results should be exactly the same as that from the RTD schedule[2].

[1] The Hour-ahead Projection is covered in the WESM Rules Amendment, Department Circular No. DC2016-10-0014.
[2] We did not test the performance of the projection processes nor did we assess the configuration of the process scheduler that coordinates the running of these processes – this is covered in another component of the NMMS audit.

In addition to testing HAP, DAP and WAP this way, IES also tested whether ramp rate violations were present across any of the RTD, HAP, DAP and WAP energy and regulation up and down schedules. IES also reviewed and assessed the inputs and outputs of the DAP sensitivities to check that they had been set up as expected.

In testing the consistency of the processes with respect to RTD outcomes, IES developed six (6) test cases for IEMOP to execute. These were based on the Audit Test Network (16-bus system) that was used for MDOM testing in Component 1. The test cases were differentiated by the generator offers and demands. They were also differentiated by whether or not reserves and ramp rate constraints were included.

The results produced by the RTD, HAP, DAP and WAP were compared to each other for consistency. This was done for each test case and each period (noting that there are differences in the resolution of results: 5-minute for RTD and HAP and hourly for DAP and WAP). Our comparisons were done across the following outputs for each process:

- Nodal prices and generator schedules for energy;
- Prices and schedules for reserves;
- Power flows on the transmission lines; and
- Other outputs depending on the type of test case such as the presence of ramp rate violations.

It should be emphasized that the focus of these checks was strictly to inspect the consistency of the outputs. The correctness of the outputs is the focus of the other areas of the NMMS audit.

CERTIFICATION OF CONSISTENCY BETWEEN THE REAL-TIME DISPATCH, HOUR-AHEAD PROJECTION, DAY-AHEAD PROJECTION and WEEK-AHEAD PROJECTION

The audit results show that the HAP, DAP and WAP processes do produce consistent results to that of the RTD when uncertainties are removed from the input files feeding into the MDOM. In addition to testing HAP, DAP and WAP in this way, IES was also able to confirm the inputs and outputs of the DAP sensitivities had been set up as expected.

"As such, we believe the market projections from the MDOM as specified Chapter 3 of the WESM Rules, specifically the Hour-Ahead Projection, Day-Ahead Projection, and Week-Ahead Projection are consistent with Real-Time Dispatch outcomes."

LIMITATION OF LIABILITY

In furnishing this certification, Intelligent Energy Systems specifically limits its liability in accordance with Clause 5.08 (b) of the Contract for External Audit Services (Independent Software audit of the New Market Management System) dated 17 February 2017, and that no person shall be entitled to claim against Intelligent Energy Systems, any losses or damage whether indirect, special or consequential, in excess of that limitation, and IEMOP shall ensure that all persons or parties who may rely on this certification are aware of this limitation of liability.

Yours sincerely

[redacted]

Hugh Bannister
Chairman and CEO

IES
Intelligent Energy Systems

18 September 2018

Mr. Felixberto U. Bustos, Jr.
Chairman, PEM Audit Committee
Philippine Electricity Market Corporation
18/F Robinsons Equitable Tower
ADB Avenue, Ortigas Center
1600 Pasig City, Philippines

Dear Mr. Bustos

SCOPE OF THIS CERTIFICATE

The certification testing verifies that the functionality of the New Market Management System's (NMMS) Market Participant Interface (MPI), is consistent with the provisions of the proposed WESM Rules and Manuals, and the bid validation rules in particular.

CERTIFICATION TESTING METHODOLOGY

A list of validation rules (MPI validation rules) were provided to IES based on the WESM Rules. To test each MPI validation rule, IES executed a sequence of steps in the MPI. For each step, the response of the MPI was compared to the expected response based on the corresponding MPI validation rule. For each MPI validation rule, Table 1 gives the steps actioned and the expected response of the MPI.

A number of MPI validation rules could not be tested by IES directly within the MPI interface as they relate to authentication processes or relate to internal processing of the MPI logic. For such rules, IES requested PEMC to provide IES with an explanation of the MPI functionality details and checked that this was consistent with the intent of MPI validation rule. These rules and their explanation from PEMC is given in Table 2.

For the MPI validation rules list in Table 1, the MPI has been tested and been found to produce a response consistent with the MPI validation rule.

For the rules that are listed in Table 2, IES has accepted the explanation provided by PEMC.

Note that Rule 88, as per Table 3, was replaced by the following rules regarding the battery/pumped storage price curves:

1. The battery/pumped storage price curve must consist of two (2) rows
2. Quantity entries must not exceed zero (0) or be less than the maximum (entered as a negative number) storage capacity.
3. Both entries must be monotonically increasing
4. Both price entries must be the same

The MPI has been tested and found to produce a response consistent with the above rules associated with the battery/pumped storage price curve.

CERTIFICATION OF NMMS WITH RESPECT TO MPI VALIDATION RULES

The following is our certification of the extent to which the Market Participant Interface (MPI) is consistent with the MPI validation rules.

"For the MPI validation rules which IES could test (Table 1), the Market Participant Interface (MPI) has been tested and been found to produce a response consistent with the MPI validation rule.

For the rules which IES couldn't test (Table 2), IES has accepted the explanation provided by PEMC and is assured that the MPI functionality is consistent with the MPI validation rule.

Rule 88 (Table 3) was replaced by the following rules regarding the battery/pumped storage price curves:

1. *The battery/pumped storage price curve must consist of two (2) rows*
2. *Quantity entries must not exceed zero (0) or be less than the maximum (entered as a negative number) storage capacity.*
3. *Both entries must be monotonically increasing*
4. *Both price entries must be the same*

The MPI has been tested and found to produce a response consistent with the above rules associated with the battery/pumped storage price curve".

LIMITATION OF LIABILITY

In furnishing this certification, Intelligent Energy Systems specifically limits its liability in accordance with Clause 5.08 (b) of the Contract for External Audit Services (Independent Software audit of the New Market Management System) dated 17 February 2017, and that no person shall be entitled to claim against Intelligent Energy Systems, any losses or damage whether indirect, special or consequential, in excess of that limitation, and PEMC shall ensure that all persons or parties who may rely on this certification are aware of this limitation of liability.

Yours sincerely



Hugh Bannister
Chairman and CEO

Table 1 MPI validation rules, steps actioned and expected response from MPI

Rule	Action	Action	Action	Action	Expected result
1	The configurable Time Precision must be initialized to one minute.				
4	All Submitted Offers and Bids must adhere to the following numerical precision rules: a) all time quantities must have a precision no finer than the configurable Time Precision, b) all Energy, Reserve, and Ramp Rate quantities must have a precision no finer than one decimal place, and c) all prices must have a precision no finer than two decimal places.				
	market result > market projection displays > regional summary	Checked "Run time" time entry box			Precision of 1 minute
	market result > market projection displays > LPMs	Checked "Run time" time entry box			Precision of 1 minute
	market result > market projection displays > schedules	Checked "Run time" time entry box			Precision of 1 minute
	market result > market projection displays > reserve schedules	Checked "Run time" time entry box			Precision of 1 minute
	market result > RTD output displays > regional summary	Checked "Interval end" time entry box			Precision of 1 minute
	market result > RTD output displays > LPMs	Checked "Interval end" time entry box			Precision of 1 minute
	market result > RTD output displays > resource specific	Checked "Interval end" time entry box			Precision of 1 minute
	market result > RTD output displays > reserve schedules	Checked "Interval end" time entry box			Precision of 1 minute
	market result > DIPC output displays > DIPC LPMs	Checked "Interval end" time entry box			Precision of 1 minute
	market result > TIPC output displays > TIPC LPMs	Checked "Interval end" time entry box			Precision of 1 minute
2	The Scheduled Energy and Reserves, and Self-scheduled Nomination Quantity Precision must be 0.1 MW.				
2	The Ramp Quantity Precision must be 0.1 MW/min.				
3	The configurable Price Precision must be 0.01 of a Philippine Peso.				
a	Create new gen bid	> Nominations	> Nomination grid > new row > update	> edit nomination grid	
				HR = 1, Minute = 05, Qty = 0.09	

Rule	Action	Action	Action	Action	Expected result
				> Update	
				> Submit bid	Bid not accepted with error message
b	Create new gen bid	> Daily	> bid grid > edit > new row	Operating level = 16.09	
				Up = 16.09	
				Down = 16.09	
				> Update	Price curve not created
c	Create new gen bid	> Energy	> bid grid > edit > new row > update	select bid hour	
		> AS-RU	> price curve > edit	new row > Qty = 0; P = 5000	
		> AS-RD		new row > Qty = 8; P = 5000	
		> AS-FR		new row > Qty = 16.09; P = 5000	
		> AS-FL		new row > Qty = 16.09; P = 5000.001	
		> AS-SR		> Update	Price curve not created
		> AS-SL			
		> AS-DR			
		> AS-DL			
5	The maximum number of price and quantity pairs in an offer or bid must be 11.				
	Create new gen bid	> Energy	> bid grid > edit > new row > update	select bid hour	
			> price curve > edit	new row > Qty = 0; P = 1000	
				new row > Qty = 10; P = 1000	
				new row > Qty = 11; P = 1100	
				new row > Qty = 12; P = 1200	
				new row > Qty = 13; P = 1300	
				new row > Qty = 14; P = 1400	
				new row > Qty = 15; P = 1500	
				new row > Qty = 16; P = 1600	
				new row > Qty = 17; P = 1700	
				new row > Qty = 18; P = 1800	
				new row > Qty = 19; P = 1900	

Rule	Action	Action	Action	Action	Expected result
				new row > Qty = 20; P = 2000	
				> Update	
				> Submit bid	Bid not accepted with error message
6	The minimum incremental quantity for an energy offer or bid must be 1 MW				
	Create new gen bid	> Energy	> bid grid > edit > new row > update	select bid hour	
			> price curve > edit	new row > Qty = 0; P = 1000	
				new row > Qty = 0.9; P = 1000	
				> Update	
				> Submit bid	Bid not accepted with error message
7	The maximum number of ramp rate curve segments for offers or bids must be 5.				
	Create new gen bid (00COAL_01)	> Energy	> bid grid > edit > new row > update	select bid hour	
1			> price curve > edit	new row > Qty = 0; P = 1000	
2				new row > Qty = 120; P = 1200	
3				new row > Qty = 382; P = 1400	
4		> Daily	> bid grid > edit > new row	new row > OL = 0, Up = 1, Down = 1	
5				new row > OL = 1, Up = 1, Down = 1	
6				new row > OL = 2, Up = 1, Down = 1	
7				new row > OL = 3, Up = 1, Down = 1	
8				new row > OL = 4, Up = 1, Down = 1	
9				new row > OL = 5, Up = 1, Down = 1	
10				> Update	
11				> Submit bid	Bid not accepted with error message

Rule	Action	Action	Action	Action	Expected result
8	The energy offer/bid floor must be –P10,000/MWh.				
	Create new gen bid	> Energy	> bid grid > edit > new row > update	select bid hour	
1			> price curve > edit	new row > Qty = 0; P = -10001	
2				new row > Qty = 10; P = -10001	
3				> Update	
4				> Submit bid	Bid not accepted with error message
9	The energy offer/bid cap must be P32,000/MWh.				
a	Create new gen bid	> Energy	> bid grid > edit > new row > update	select bid hour	
1			> price curve > edit	new row > Qty = 0; P = 32001	
2				new row > Qty = 10; P = 32001	
3				> Update	
4				> Submit bid	Bid not accepted with error message
10	The maximum number of price and quantity pairs in a reserve offer must be 5.				
					See rule #50
11	The minimum incremental quantity for a regulation raise reserve offer must be 1				
12	The minimum incremental quantity for a regulation lower reserve offer must be 1				
13	The minimum incremental quantity for a fast contingency reserve raise offer must be 1				
14	The minimum incremental quantity for a fast contingency lower reserve offer must be 1				
15	The minimum incremental quantity for a slow contingency reserve raise offer must be 1				
16	The minimum incremental quantity for a slow contingency lower reserve offer must be 1				
17	The minimum incremental quantity for a delayed contingency reserve raise offer must be 1				
18	The minimum incremental quantity for a delayed contingency lower reserve offer must be 1				
	Create new gen bid	> AS-RU	> bid grid > edit > new row > update	select bid hour	
1		> AS-RD	> price curve > edit	new row > Qty = 0; P = 1000	
2		> AS-FR		new row > Qty = 0.9; P = 1000	
3		> AS-FL		> Update	

Rule	Action	Action	Action	Action	Expected result
4		> AS-SR		> Submit bid	Bid not accepted with error message
5		> AS-SL			
6		> AS-DR			
7		> AS-DL			
19	The reserve offer floor must be –P10,000/MWh.				
	Create new gen bid	> AS-RU	> bid grid > edit > new row > update	select bid hour	
1		> AS-RD	> price curve > edit	new row > Qty = 0; P = -10001	
2		> AS-FR		new row > Qty = 0.9; P = -10001	
3		> AS-FL		> Update	
4		> AS-SR		> Submit bid	Bid not accepted with error message
5		> AS-SL			
6		> AS-DR			
7		> AS-DL			
20	The reserve offer cap must be P32,000/MWh.				
	Create new gen bid	> AS-RU	> bid grid > edit > new row > update	select bid hour	
1			> price curve > edit	new row > Qty = 0; P = 32001	
2				new row > Qty = 10; P = 32001	
3				> Update	
4				> Submit bid	Bid not accepted with error message
21	The Open Market Horizon must be from the present day (D) up to seven days from the present day (D+7).				
	Create new gen bid	> Select a day D+8 > submit bid			Bid not allowed to be created
23	An authenticated user may do any of the following: a) submit offers and bids, b) submit self-scheduled nominations, c) submit nodal load forecasts (i.e. pump-storage plants during pump-mode), d) extract data (i.e. prices and schedules), e) receive advisories only for the registered resources for which the authenticated user is authorized.				
					Untested - See explanation from PEMC
29	The Market Participant Name must be specified in a Daily Bid Component.				

Rule	Action	Action	Action	Action	Expected result
	Create new bid				Market participant name displayed
30	The following Market Products must be specified in the Daily Bid Component: • EN for Energy • RU for Regulation Upward Reserve • RD for Regulation Downward Reserve • FR for Fast Contingency Raise Reserve • FL for Fast Contingency Lower Reserve • SR for Slow Contingency Raise Reserve • SL for Slow Contingency Lower Reserve • DR for Delayed Contingency Raise Reserve • DL for Delayed Contingency Lower Reserve				
	Create new gen bid				All market products made available through the MPI interface
31	The Offer/Bid Period (Start Date/Time, End Date/Time) must be specified in the Daily Bid Component.				
	Create new gen bid	> Daily			Offer/Bid Period (Start Date/Time, End Date/Time) specified in the Daily Bid Component.
32	The Offer/Bid Period of a Daily Bid Component must represent only one Trading Day.				
					The Offer/Bid Period of a Daily Bid Component must represent only one Trading Day.
34	The Resource ID must be specified in the Daily Bid Component				
	Create new gen bid	> Daily			Resource ID specified in the Daily Bid Component
35	The Resource Type (Generator or Load) must be specified in the Daily Bid Component.				

Rule	Action	Action	Action	Action	Expected result
	Create new gen bid	> Daily			Resource type specified in the Daily Bid Component
36	The Resource Type specified in a Daily Bid Component must be one of the following: 1) a Generating Resource ("G"); 2) a Load Resource ("L")				
	Create new gen bid				Resource Type specified in a Daily Bid Component is one of the following: 1) a Generating Resource ("G"); 2) a Load Resource ("L")
37	A Daily Bid Component must include at least one Market Product.				
					Untested - See explanation from PEMC
39	A Daily Bid Component must undergo Bid Content Check immediately after its submission. A Submitted Bid that passes Bid Content Check must become an not accepted Bid. A Submitted Bid that fails Bid Content Check must become a not accepted Bid.				
					Untested - See explanation from PEMC
40	A previously valid offer/bid must undergo Bid Content Check again after the Registration Data update for the Trading Day specified. A previously valid offer/bid that passes Bid Content Check must become an Accepted Bid. A previously valid offer/bid that fails Bid Content Check must become a Rejected Bid.				
					Untested - See explanation from PEMC
41	The Market Participant specified in an Offer/Bid must be notified of the status of that Offer/Bid and of any failed Bid Content Check rules.				
					A notification of the status of a submitted bid and a reason for a failed bid is given by the MPI when the bid is submitted.
	GENERATING RESOURCE BID COMPONENT				
42	An Offer with Resource Type set to "G" must be considered a Generating Resource Bid.				
	Create new gen bid				
43	A Generating Resource Offer may include either of following: 1) energy offer for at least one Trading Hour in the Bid Period specified in that Bid 2) at least one self-scheduled nomination 3) reserve offer for at least one trading hour in the Bid Period; or 4) at least one daily ramp rate component; 5) no Pumping Bid Component for each Trading Hour in that Bid Period, if and only if that Generating Resource is not registered as a Pumped Storage Hydro Unit or a Pump for that Bid Period;				
	Create new gen bid				

Rule	Action	Action	Action	Action	Expected result
	GENERATING RESOURCE ENERGY OFFER COMPONENT CONTENT				
44	The Generating Resource Energy Offer Component must be associated with a Trading Hour in the Bid Period specified				
45	A Generating Resource Energy Offer Component must specify an Energy Offer Curve, unless a non-compliance reason is provided for a particular Trading Hour.				
a	Create new gen bid	> Energy	> bid grid > edit > new row > update		
1			> no energy price curve created		
2			> Submit bid		Error message and submission not accepted
b	Create new gen bid	> Energy	> bid grid > edit > new row > update		
1			> bid grid > edit		
2			> enter "asdfgassfg" in non-compliance reason column		
3			> Submit bid		Submission valid
46	The Energy Offer Curve specified in a Generating Resource Energy Offer Component must be monotonically increasing with any number of segments from 1 to 11				
A	Create new gen bid	> Energy	> bid grid > edit > new row > update	select bid hour	
1			> price curve > edit	new row > Qty = 0; P = 1000	
2				new row > Qty = 10; P = 1000	
3				new row > Qty = 11; P = 1100	
4				new row > Qty = 12; P = 1000	
5				new row > Qty = 13; P = 1200	
6				new row > Qty = 14; P = 1300	
7				new row > Qty = 15; P = 1400	
8				new row > Qty = 16; P = 1500	
9				new row > Qty = 17; P = 1600	
10				new row > Qty = 18; P = 1700	
11				new row > Qty = 19; P = 1800	
12				new row > Qty = 20; P = 1900	
13				> Update	

Rule	Action	Action	Action	Action	Expected result
14				> Submit bid	Bid not accepted with error message
47	A Generating Resource Energy Offer Component shall specify a Battery Energy Offer Curve for a particular Trading Hour only if the Generating Resource is a Battery.				
a	Create new gen (non-battery) bid	> Energy	> bid grid > edit > new row > update	select bid hour	
1			> battery/pump storage price curve > edit	new row > Qty = 0; P = 1000	
2				new row > Qty = 10; P = 1000	
3				> Update	
4				> Submit bid	Bid not accepted with error message
	GENERATING RESOURCE ANCILLARY SERVICE BID COMPONENT CONTENT				
48	The Generating Resource Ancillary Service Offer Component must be associated with a Trading Hour and a particular reserve type in the Bid Period				
a					
49	A Generating Resource Ancillary Service Offer Component must specify at least one of the following: 1) at most one Bid Component for each of the Ancillary Services (currently 8 different Reserve types) for each Trading hour.				
a	Create new gen bid	> AS-RU	> bid grid > edit > new row > update		
1		> AS-RD	> price curve > edit		
2		> AS-FR	> no values entered		
3		> AS-FL	> Update price curve		
4		> AS-SR	> Submit bid		Bid not accepted with error message
5		> AS-SL			
6		> AS-DR			
7		> AS-DL			
50	The Ancillary Service Offer Curve specified in a Generating Resource Energy Bid Component must be monotonically increasing with any number of segments from 1 to 5				
a	Create new gen bid	> AS-RU	> bid grid > edit > new row > update	select bid hour	
1			> price curve > edit	new row > Qty = 0; P = 1000	
2				new row > Qty = 10; P = 1000	
3				new row > Qty = 11; P = 1100	

Rule	Action	Action	Action	Action	Expected result
4				new row > Qty = 12; P = 1200	
5				new row > Qty = 13; P = 1300	
6				new row > Qty = 14; P = 1400	
7				> Update	
8				> Submit bid	Bid not accepted with error message
b	Create new gen bid	> AS-RU	> bid grid > edit > new row > update	select bid hour	
1			> price curve > edit	new row >	
2				> Update	
3				> Submit bid	Bid not accepted with error message
c	Create new gen bid	> AS-RU	> bid grid > edit > new row > update	select bid hour	
1			> price curve > edit	new row > Qty = 0; P = 1000	
2				new row > Qty = 10; P = 1000	
3				new row > Qty = 11; P = 900	
4				> Update	
5				> Submit bid	Bid not accepted with error message
	GENERATING RESOURCE RAMP RATE CURVE COMPONENT CONTENT				
51	The Generating Resource Ramp Rate Curve Component is applicable to the Trading Day that includes the Bid Period specified in the Bid.				
a					
52	A Generating Resource Ramp Rate Curve Component must specify one segment that contains the following: 1) MW break quantity, 2) ramp rate up; and 3) ramp rate down.				
a	Create new gen bid	> Daily	> bid grid > edit	> new row > OL = 0, Up = 1, Down = blank	
1				> Update	
2				> Submit bid	Bid not accepted with error message
b	Create new gen bid	> Daily	> bid grid > edit	> new row > OL = 0, Up = blank, Down = 1	
1				> Update	

Rule	Action	Action	Action	Action	Expected result
2				> Submit bid	Bid not accepted with error message
c	Create new gen bid	> Daily	> bid grid > edit	> new row > OL = blank, Up = 1, Down = 1	
1				> Update	
2				> Submit bid	Bid not accepted with error message
	GENERATING RESOURCE SELF-SCHEDULED NOMINATION COMPONENT CONTENT				
56	The Generating Resource Self-Scheduled Nomination component can only be submitted if the Resource is allowed to make a Nomination.				
a	Create new (non self-scheduling) gen bid	> Nomination tab			
1		> Enter MW values in nomination grid			
2		> Submit bid			Bid not accepted with error message
b	Create new (non self-scheduling) gen bid	> Nomination tab	> edit nomination grid		
1			> no values entered		
2			> Update grid		
3			> Submit bid		Bid not accepted with error message
	LOAD RESOURCE BID CONTENT				
57	A Bid with Resource Type set to "L" must be considered a Load Resource Bid.				
58	A Load Resource Bid may include the following: 1) at most one energy bid component for at least one Trading Hour in the Bid Period specified in that Bid; 2) at least one self-scheduled nomination; 3) reserve offer for at least one trading hour in that Bid Period				
	LOAD RESOURCE ENERGY BID COMPONENT CONTENT				
59	The Load Resource Energy Bid Component must be associated with a Trading Day in the Bid Period specified in the Bid.				
61	The Energy Bid Curve specified in a Load Resource Energy Bid Component must be monotonically decreasing with any number of segments from 1 to the 11				
A	Create new load bid	> Energy	> bid grid > edit > new row > update	select bid hour	
1			> price curve > edit	new row > Qty = 0; P = 1000	

Rule	Action	Action	Action	Action	Expected result
2				new row > Qty = 10; P = 1000	
3				new row > Qty = 11; P = 999	
4				new row > Qty = 12; P = 998	
5				new row > Qty = 13; P = 997	
6				new row > Qty = 14; P = 996	
7				new row > Qty = 15; P = 995	
8				new row > Qty = 16; P = 994	
9				new row > Qty = 17; P = 993	
10				new row > Qty = 18; P = 992	
11				new row > Qty = 19; P = 991	
12				new row > Qty = 20; P = 990	
13				> Update	
14				> Submit bid	Bid not accepted with error message
b	Create new load bid	> Energy	> bid grid > edit > new row > update	select bid hour	
1			> price curve > edit	new row >	
2				> Update	
3				> Submit bid	Bid not accepted with error message
c	Create new load bid	> Energy	> bid grid > edit > new row > update	select bid hour	
1			> price curve > edit	new row > Qty = 0; P = 1000	
2				new row > Qty = 10; P = 1000	
3				new row > Qty = 11; P = 1100	
4				> Update	
5				> Submit bid	Bid not accepted with error message
d	Create new gen (pump) bid	> Energy	> bid grid > edit > new row > update	select bid hour	
1			> battery/pump storage price curve > edit	new row > Qty = 0; P = 1000	
2				new row > Qty = 1; P = 1000	
3				> Update	

Rule	Action	Action	Action	Action	Expected result
4				> Submit bid	Bid accepted
e	Create new gen (non-pump) bid	> Energy	> bid grid > edit > new row > update	select bid hour	
1			> battery/pump storage price curve > edit	new row > Qty = 0; P = 1000	
2				new row > Qty = 95; P = 1000	
3				> Update	
4				> Submit bid	Bid not accepted with error message
	LOAD RESOURCE SELF-SCHEDULED BID COMPONENT CONTENT				
62	The Load Resource Self-Scheduled Nomination component can only be submitted if the Resource is allowed for Nomination.				
62	A Load Resource PT Self-Scheduled Nomination Component must specify a Self-Scheduled Quantity (MW).				
a	Create new (non self-scheduling) load bid	> Nomination tab			
1		> Enter MW values in nomination grid			
2		> Submit bid			Bid not accepted with error message
b	Create new (non self-scheduling) load bid	> Nomination tab	> edit nomination grid		
1			> no values entered		
2			> Update grid		
3			> Submit bid		Bid not accepted with error message
	LOAD RESOURCE BID CONTENT RULES				
	FTR BID CONTENT				
	GENERATING RESOURCE BID VALIDATION				
78	The Generating Resource specified in a Generating Resource Bid must be registered as a Generating Resource for the Bid Period				
					Untested - See explanation from PEMC
79	The Generating Resource specified in a Generating Resource Bid must be certified for participation in the Market indicated by the and for the Bid Period specified in the Bid.				
					Untested - See explanation from PEMC
	GENERATING RESOURCE ENERGY BID COMPONENT VALIDATION				

Rule	Action	Action	Action	Action	Expected result
80	All Quantities of the Energy Offer Price Curve must not be negative.				
A	Create new gen bid	> Energy	> bid grid > edit > new row > update	select bid hour	
1			> energy price curve > edit	new row > Qty = -10; P = 1000	
2				new row > Qty = 0; P = 1000	
3				> Update	
4				> Submit bid	Bid not accepted with error message
81	All Quantities of the Pump Storage Price Curve must not be negative.				
A	Create new gen bid	> Energy	> bid grid > edit > new row > update	select bid hour	
1			> battery/PS price curve > edit	new row > Qty = -10; P = 1000	
2				new row > Qty = 0; P = 1000	
3				> Update	
4				> Submit bid	Bid not accepted with error message
82	All Prices of the Energy Offer Price Curve must not be greater than the Energy Offer Cap.				
					See rule #9
83	All Prices of the Energy Offer Price Curve must not be less than the Energy Offer Floor.				
					See rule #8
84	All Prices of the Battery/Pump Storage Price Curve must not be less than the Energy Offer Floor.				
84	All Prices of the Battery/Pump Storage Price Curve must not be greater than the Energy Offer Cap.				
A	Create new gen bid	> Energy	> bid grid > edit > new row > update	select bid hour	
1			> battery/PS price curve > edit	new row > Qty = 0; P = -10001	
2				new row > Qty = 10; P = -10001	
3				> Update	
4				> Submit bid	Bid not accepted with error message
B	Create new gen bid	> Energy	> bid grid > edit > new row > update	select bid hour	

Rule	Action	Action	Action	Action	Expected result
1			> battery/PS price curve > edit	new row > Qty = 0; P = 32001	
2				new row > Qty = 10; P = 32001	
3				> Update	
4				> Submit bid	Bid not accepted with error message
85	The Energy Offer Price Curve must be monotonically increasing.				
a	Create new gen bid	> Energy	> bid grid > edit > new row > update	select bid hour	
1			> energy price curve > edit	new row > Qty = 0; P = 1000	
2				new row > Qty = 10; P = 1000	
3				new row > Qty = 11; P = 900	
4				> Update	
5				> Submit bid	Bid not accepted with error message
86	The Battery/Pump Storage Price Curve must be monotonically increasing.				
a	Create new gen bid	> Energy	> bid grid > edit > new row > update	select bid hour	
1			> batt/PS price curve > edit	new row > Qty = 0; P = 1000	
2				new row > Qty = 10; P = 1000	
3				new row > Qty = 11; P = 900	
4				> Update	
5				> Submit bid	Bid not accepted with error message
87	The first Quantity of the Energy Offer Price Curve must not be less than the registered Minimum Load.				
a	Create new gen (coal, min: 150 MW) bid	> Energy	> bid grid > edit > new row > update	select bid hour	
1			> energy price curve > edit	new row > Qty = 10; P = 1000	
2				new row > Qty = 382; P = 1000	
3				> Update	
4				> Submit bid	Bid not accepted with error message

Rule	Action	Action	Action	Action	Expected result
b	Create new gen (battery, min: -60 MW) bid	> Energy	> bid grid > edit > new row > update	select bid hour	
1			> energy price curve > edit	new row > Qty = -70; P = 1000	
2				new row > Qty = 0; P = 1000	
3				> Update	
4				> Submit bid	Bid not accepted with error message
c	Create new gen (battery, min: -60 MW) bid	> Energy	> bid grid > edit > new row > update	select bid hour	
1			> energy price curve > edit	new row > Qty = -70; P = 1000	
2				new row > Qty = 0; P = 1000	
3				> Update	
4				> Submit bid	Bid not accepted with error message
88	The first Quantity of the Pump Storage Price Curve must not be less than the registered Minimum Load Pump-Storage Resource.				
A	Create new gen (pump, min: 0 MW) bid	> Energy	> bid grid > edit > new row > update	select bid hour	
1			> battery/pumped storage price curve > edit	new row > Qty = -10; P = 1000	
2				new row > Qty = 0; P = 1000	
3				> Update	
4				> Submit bid	Bid not accepted with error message
b	Create new gen (battery, min: -60 MW) bid	> Energy	> bid grid > edit > new row > update	select bid hour	
1			> battery/pumped storage price curve > edit	new row > Qty = -10; P = 1000	
2				new row > Qty = 0; P = 1000	
3				> Update	
4				> Submit bid	Bid accepted
89	The last Quantity of the Energy Offer Price Curve must not be greater than the registered Maximum Capacity.				
A	Create new gen bid	> Energy	> bid grid > edit > new row > update	select bid hour	
1			> energy price curve > edit	new row > Qty = 0; P = 1000	

Rule	Action	Action	Action	Action	Expected result
2				new row > Qty = 9999; P = 1000	
3				> Update	
4				> Submit bid	Bid not accepted with error message
90	The last Quantity of the Pump Storage Price Curve must not be greater than the registered Maximum Pumping Capacity for that Pump Storage Resource.				
	The last Quantity of the Battery Price Curve must not be greater than the registered Maximum Discharge Capacity for that Battery Resource.				
a	Create new gen (pump) bid	> Energy	> bid grid > edit > new row > update	select bid hour	
1			> batt/PS price curve > edit	new row > Qty = 0; P = 1000	
2				new row > Qty = 9999; P = 1000	
3				> Update	
4				> Submit bid	Bid not accepted with error message
b	Create new gen (batt) bid	> Energy	> bid grid > edit > new row > update	select bid hour	
1			> batt/PS price curve > edit	new row > Qty = 0; P = 1000	
2				new row > Qty = 9999; P = 1000	
3				> Update	
4				> Submit bid	Bid not accepted with error message
91	The minimum increment of generation break quantities in an Energy Offer Price Curve or Battery/Pump Storage Price Curve is 1 MW.				
A	Create new gen (batt) bid	> Energy	> bid grid > edit > new row > update	select bid hour	
1			> battery/pumped storage price curve > edit	new row > Qty = 0; P = 1000	
2				new row > Qty = 0.9; P = 1000	
3				> Update	
4				> Submit bid	Bid not accepted with error message
93	The Battery/Pump Storage Price Curve must not overlap with the Energy Offer Price Curve for a specific Trading Hour.				
a	Create new gen (batt) bid	> Energy	> bid grid > edit > new row > update	select bid hour	

Rule	Action	Action	Action	Action	Expected result
1			> energy price curve > edit	new row > Qty = 0; P = 1000	
2				new row > Qty = 1; P = 1000	
3				> Update	
4			> battery/pumped storage price curve > edit		
5				new row > Qty = 0; P = 1000	
6				new row > Qty = 1; P = 1000	
7				> Update	
8				> Submit bid	Bid not accepted with error message
94	The first two prices in the Energy Offer Price Curve must be equal.				
95	The last Quantity of the Energy Offer Price Curve should be equal to the registered Maximum Capacity.				
A	Create new gen (hydro, max: 95 MW) bid	> Energy	> bid grid > edit > new row > update	select bid hour	
1			> energy price curve > edit	new row > Qty = 0; P = 1000	
2				new row > Qty = 10; P = 1100	
3				new row > Qty = 100; P = 1200	
4				> Update	
5				> Submit bid	Bid not accepted with error messages (first two prices not equal and last price not equal to Pmax)
b	Create new gen (hydro, max: 95 MW) bid	> Energy	> bid grid > edit > new row > update	select bid hour	
1			> energy price curve > edit	new row > Qty = 0; P = 1000	
2				new row > Qty = 10; P = 1000	
3				new row > Qty = 95; P = 1100	
4				> Update	
5				> Submit bid	Bid accepted
96	If there is an Energy Offer Price Curve for a Trading Hour, there must not be a Pumping Self-Scheduled Nomination for the same Trading Hour.				
a	Create new gen bid	> Energy	> bid grid > edit > new row > update	select bid hour	

Rule	Action	Action	Action	Action	Expected result
1			> energy price curve > edit	new row > Qty = 0; P = 1000	
2				new row > Qty = 10; P = 1000	
3				> Update	
4			> batt/PS price curve > edit	new row > Qty = 0; P = 1000	
5				new row > Qty = 10; P = 1000	
6				> Update	
7				> Submit bid	Bid not accepted with error message
	GENERATING RESOURCE ANCILLARY SERVICE BID COMPONENT VALIDATION				
97	The Generating Resource that has a Regulation Lower Offer must be effectively registered for the relevant Trading Day.				
					Untested - See explanation from PEMC
98	The Regulation Down Offer Quantity must be greater than zero.				
A	Create new gen bid	> AS-RD	> bid grid > edit > new row > update	select bid hour	
1			> price curve > edit	new row > Qty = -10; P = 1000	
2				new row > Qty = 0; P = 1000	
3				> Update	
4				> Submit bid	Bid not accepted with error message
99	The Regulation Down Offer Price must not be less than the Ancillary Service Offer Floor.				
a	Create new gen bid	> AS-RD	> bid grid > edit > new row > update	select bid hour	
1			> price curve > edit	new row > Qty = 0; P = -10001	
2				new row > Qty = 10; P = -10001	
3				> Update	
4				> Submit bid	Bid not accepted with error message
100	The Regulation Down Offer Price must not be greater than the Ancillary Service Offer Cap.				
a	Create new gen bid	> AS-RD	> bid grid > edit > new row > update	select bid hour	
1			> price curve > edit	new row > Qty = 0; P = 32001	

Rule	Action	Action	Action	Action	Expected result
2				new row > Qty = 10; P = 32001	
3				> Update	
4				> Submit bid	Bid not accepted with error message
101	The Generating Resource that has a Regulation Raise Offer must be certified for Regulation Raise for the Bid Period specified in that Bid and for that Online Generating Resource State.				
					Untested - See explanation from PEMC
102	The Regulation Up Offer Quantity must be greater than zero.				
a	Create new gen bid	> AS-RU	> bid grid > edit > new row > update	select bid hour	
1			> price curve > edit	new row > Qty = -10; P = 1000	
2				new row > Qty = 0; P = 1000	
3				> Update	
4				> Submit bid	Bid not accepted with error message
103	The Regulation Up Offer Price must not be less than the Ancillary Service Offer Floor.				
a	Create new gen bid	> AS-RU	> bid grid > edit > new row > update	select bid hour	
1			> price curve > edit	new row > Qty = 0; P = -10001	
2				new row > Qty = 10; P = -10001	
3				> Update	
4				> Submit bid	Bid not accepted with error message
104	The Regulation Up Offer Price must not be greater than the Ancillary Service Offer Cap.				
a	Create new gen bid	> AS-RU	> bid grid > edit > new row > update	select bid hour	
1			> price curve > edit	new row > Qty = 0; P = 32001	
2				new row > Qty = 10; P = 32001	
3				> Update	
4				> Submit bid	Bid not accepted with error message

Rule	Action	Action	Action	Action	Expected result
105	The minimum increment of reserve capacity break quantities in a Regulation Down Reserve Offer Price Curve is 1 MW				
106	The minimum increment of reserve break quantities in a Regulation Up Reserve Offer Price Curve is 1 MW				
107	The minimum increment of reserve capacity break quantities in a Fast Contingency Lower Reserve Offer Price Curve is 1 MW.				
108	The minimum increment of reserve capacity break quantities in a Fast Contingency Raise Reserve Offer Price Curve is 1 MW				
109	The minimum increment of reserve capacity break quantities in a Slow Contingency Lower Reserve Offer Price Curve is 1 MW				
110	The minimum increment of reserve capacity break quantities in a Slow Contingency Raise Reserve Offer Price Curve is 1 MW				
111	The minimum increment of reserve capacity break quantities in a Delayed Contingency Lower Reserve Offer Price Curve is 1 MW				
112	The minimum increment of reserve capacity break quantities in a Delayed Contingency Raise Reserve Offer Price Curve is 1 MW				
a	Create new gen bid	> AS-RU	> bid grid > edit > new row > update	select bid hour	
1		> AS-RD	> energy price curve > edit	new row > Qty = 0; P = 1000	
2		> AS-FR		new row > Qty = 0.9; P = 1000	
3		> AS-FL		> Update	
4		> AS-SR		> Submit bid	Bid not accepted with error message
5		> AS-SL			
6		> AS-DR			
7		> AS-DL			
113	The Max Regulation Down Reserve Offer Quantity must not be greater than the registered Max Regulation Down Reserve Capacity for the Resource.				
129	The Regulation Down Reserve Offer Price Curve must be monotonically increasing.				
a	Create new gen bid	> AS-RD	> bid grid > edit > new row > update	select bid hour	
1			> price curve > edit	new row > Qty = 0; P = 1000	
2				new row > Qty = 10; P = 1000	
3				new row > Qty = 50; P = 900	
4				new row > Qty = 9999; P = 1000	
5				> Update	
6				> Submit bid	Bid not accepted with error message for exceeding capacity and not monotonically increasing
115	The Max Regulation Up Reserve Offer Quantity must not be greater than the registered Max Regulation Up Reserve Capacity for the Resource.				

Rule	Action	Action	Action	Action	Expected result
130	The Regulation Up Reserve Offer Price Curve must be monotonically increasing.				
a	Create new gen bid	> AS-RU	> bid grid > edit > new row > update	select bid hour	
1			> price curve > edit	new row > Qty = 0; P = 1000	
2				new row > Qty = 10; P = 1000	
3				new row > Qty = 50; P = 900	
4				new row > Qty = 9999; P = 1000	
5				> Update	
6				> Submit bid	Bid not accepted with error message for exceeding capacity and not monotonically increasing
117	The Max Fast Contingency Lower Reserve Offer Quantity must not be greater than the registered Max Fast Contingency Lower Reserve Capacity for the Resource.				
131	The Fast Contingency Lower Reserve Offer Price Curve must be monotonically increasing.				
a	Create new gen bid	> AS-FL	> bid grid > edit > new row > update	select bid hour	
1			> price curve > edit	new row > Qty = 0; P = 1000	
2				new row > Qty = 10; P = 1000	
3				new row > Qty = 50; P = 900	
4				new row > Qty = 9999; P = 1000	
5				> Update	
6				> Submit bid	Bid not accepted with error message for exceeding capacity and not monotonically increasing
119	The Max Fast Contingency Raise Reserve Offer Quantity must not be greater than the registered Max Fast Contingency Raise Reserve Capacity for the Resource.				
132	The Fast Contingency Raise Reserve Offer Price Curve must be monotonically increasing.				
a	Create new gen bid	> AS-FR	> bid grid > edit > new row > update	select bid hour	
1			> price curve > edit	new row > Qty = 0; P = 1000	
2				new row > Qty = 10; P = 1000	

Rule	Action	Action	Action	Action	Expected result
3				new row > Qty = 50; P = 900	
4				new row > Qty = 9999; P = 1000	
5				> Update	
6				> Submit bid	Bid not accepted with error message for exceeding capacity and not monotonically increasing
121	The Max Slow Contingency Lower Reserve Offer Quantity must not be greater than the registered Max Slow Contingency Lower Reserve Capacity for the Resource.				
133	The Slow Contingency Lower Reserve Offer Price Curve must be monotonically increasing.				
a	Create new gen bid	> AS-SL	> bid grid > edit > new row > update	select bid hour	
1			> price curve > edit	new row > Qty = 0; P = 1000	
2				new row > Qty = 10; P = 1000	
3				new row > Qty = 50; P = 900	
4				new row > Qty = 9999; P = 1000	
5				> Update	
6				> Submit bid	Bid not accepted with error message for exceeding capacity and not monotonically increasing
123	The Max Slow Contingency Raise Reserve Offer Quantity must not be greater than the registered Max Slow Contingency Raise Reserve Capacity for the Resource.				
134	The Slow Contingency Raise Reserve Offer Price Curve must be monotonically increasing.				
a	Create new gen bid	> AS-SR	> bid grid > edit > new row > update	select bid hour	
1			> price curve > edit	new row > Qty = 0; P = 1000	
2				new row > Qty = 10; P = 1000	
3				new row > Qty = 50; P = 900	
4				new row > Qty = 9999; P = 1000	
5				> Update	

Rule	Action	Action	Action	Action	Expected result
6				> Submit bid	Bid not accepted with error message for exceeding capacity and not monotonically increasing
125	The Max Delayed Contingency Lower Reserve Offer Quantity must not be greater than the registered Max Delayed Contingency Lower Reserve Capacity for the Resource.				
135	The Delayed Contingency Lower Reserve Offer Price Curve must be monotonically increasing.				
	Create new gen bid	> AS-DL	> bid grid > edit > new row > update	select bid hour	
			> price curve > edit	new row > Qty = 0; P = 1000	
				new row > Qty = 10; P = 1000	
				new row > Qty = 50; P = 900	
				new row > Qty = 9999; P = 1000	
				> Update	
				> Submit bid	Bid not accepted with error message for exceeding capacity and not monotonically increasing
127	The Max Delayed Contingency Raise Reserve Offer Quantity must not be greater than the registered Max Delayed Contingency Raise Reserve Capacity for the Resource.				
136	The Delayed Contingency Raise Reserve Offer Price Curve must be monotonically increasing.				
a	Create new gen bid	> AS-DR	> bid grid > edit > new row > update	select bid hour	
1			> price curve > edit	new row > Qty = 0; P = 1000	
2				new row > Qty = 10; P = 1000	
3				new row > Qty = 50; P = 900	
4				new row > Qty = 9999; P = 1000	
5				> Update	
6				> Submit bid	Bid not accepted with error message for exceeding capacity and

Rule	Action	Action	Action	Action	Expected result
					not monotonically increasing
136	The first reserve offer break quantity of a reserve offer price curve must be zero				
a	Create new gen bid	> AS-RU	> bid grid > edit > new row > update	select bid hour	
1			> price curve > edit	new row > Qty = 10; P = 1000	
2				new row > Qty = 11; P = 1000	
3				> Update	
4				> Submit bid	Bid not accepted with error message
	GENERATING RESOURCE RAMP RATE BID COMPONENT VALIDATION				
143	The Ramp Rate Up Curve must be between the registered Minimum Ramp Rate and registered Maximum Ramp Rate of the Generating Resource.				
a	Create new gen (hydro, ramp rate=20) bid	> Daily	> Bid grid > edit	> new row > OL=0; Up=21; Down= 1	
1				> Update	
2				> Submit bid	Bid not accepted with error message
144	The Ramp Rate Down Curve must be between the registered Minimum Ramp Rate and registered Maximum Ramp Rate of the Generating Resource in that Bid.				
A	Create new gen (hydro, ramp rate=20) bid	> Daily	> Bid grid > edit	> new row > OL=0; Up=1; Down= 21	
1				> Update	
2				> Submit bid	Bid not accepted with error message
145	The Ramp Rate Break Quantities must be within the registered Pmin and Pmax of the Resource.				
a	Create new gen (hydro, Pmin=0, Pmax=95) bid	> Daily	> Bid grid > edit	> new row > OL=-10; Up=1; Down= 1	
1				> new row > OL=0; Up=1; Down= 1	
2				> new row > OL=100; Up=1; Down= 1	
3				> Update	
4				> Submit bid	Bid not accepted with correct error message

Rule	Action	Action	Action	Action	Expected result
	GENERATING RESOURCE SELF SCHEDULED BID COMPONENT VALIDATION				
146	The Hour/Minute specified in the Self Schedule Bid Component in a Generating Resource Bid must be unique.				
a	Create new gen bid	> Nominations	> Nomination grid > new row > update	> edit nomination grid	
147	All the nominations specified in the Self Schedule Bid Component in a Generating Resource Bid must not be less than the registered Pmin of the Generating Resource.				
a	Create new gen (ROR, Pmin=0) bid	> Nominations	> Nomination grid > new row > update	> edit nomination grid	
1				HR = 1, Minute = 05, Qty = -1	
2				> Update	
3				> Submit bid	Bid not accepted with error message
148	All the nominations specified in the Self Schedule Bid Component in a Generating Resource Bid must not be greater than the registered Pmax of the Generating Resource.				
a	Create new gen (ROR, Pmax=5) bid	> Nominations	> Nomination grid > new row > update	> edit nomination grid	
1				HR = 1, Minute = 05, Qty = 6	
2				> Update	
3				> Submit bid	Bid not accepted with error message
	GENERATING RESOURCE BID VALIDATION RULES				
	LOAD RESOURCE BID VALIDATION				
149	Load: The Load Resource specified in the Load Resource Bid must be registered as a Load Resource for the Bid Period specified in the Bid.				
					Untested - See explanation from PEMC
150	Load: The Market Participant specified in a Load Resource Bid must be authorized to submit bids for the Load Resource and the Bid Period specified in the Bid.				
					Untested - See explanation from PEMC
	LOAD RESOURCE ENERGY BID COMPONENT CONTENT				
151	Load: All Energy Bid Quantities of the Energy Bid Price Curve must be positive.				
A	Create new load bid	> Energy	> bid grid > edit > new row > update	select bid hour	
1			> price curve > edit	new row > Qty = -10; P = 1000	
2				new row > Qty = 0; P = 1000	

Rule	Action	Action	Action	Action	Expected result
3				> Update	
4				> Submit bid	Bid not accepted with error message
153	Load: All Energy Bid Prices of the Energy Bid Price Curve must not be greater than the Energy Bid Cap.				
a	Create new load bid	> Energy	> bid grid > edit > new row > update	select bid hour	
1			> price curve > edit	new row > Qty = 10; P = 32001	
2				new row > Qty = 0; P = 32001	
3				> Update	
4				> Submit bid	Bid not accepted with error message
154	Load: All Energy Bid Prices of the Energy Bid Price Curve must not be less than the Energy Bid Floor.				
a	Create new load bid	> Energy	> bid grid > edit > new row > update	select bid hour	
1			> price curve > edit	new row > Qty = 0; P = -10001	
2				new row > Qty = 10; P = -10001	
3				> Update	
4				> Submit bid	Bid not accepted with error message
155	Load: The Energy Bid Price Curve must be monotonically decreasing.				
					See rule #61
	LOAD RESOURCE SELF-SCHEDULED BID COMPONENT VALIDATION				
	LOAD RESOURCE ANCILLARY SERVICE BID COMPONENT CONTENT				
156	Load: The Hour/Minute specified in the Self Schedule Bid Component in a Load Resource Bid must be unique.				
	Load: The first reserve offer break quantity of a reserve offer price curve of a Load must be zero				
a	Create new load bid	> Nominations	> Nomination grid > new row > update	> edit nomination grid	
b	Create new load bid	> AS-RU	> bid grid > edit > new row > update	select bid hour	
1			> price curve > edit	new row > Qty = 1; P = 1000	
2				new row > Qty = 2; P = 1000	
3				> Update	

Rule	Action	Action	Action	Action	Expected result
4				> Submit bid	Bid not accepted with error message
165	The minimum increment of load reserve break quantities in a Regulation Down Reserve Offer Price Curve is 1 MW				
166	The minimum increment of load reserve break quantities in a Regulation Up Reserve Offer Price Curve is 1 MW				
167	The minimum increment of load break quantities in a Fast Contingency Lower Reserve Offer Price Curve is 1 MW				
168	The minimum increment of load break quantities in Fast Contingency Raise Reserve Offer Price Curve is 1 MW				
169	The minimum increment of load break quantities in Slow Contingency Lower Reserve Offer Price Curve is 1 MW				
170	The minimum increment of load break quantities in Slow Contingency Raise Reserve Offer Price Curve is 1 MW				
171	The minimum increment of load break quantities in Delay Contingency Lower Reserve Offer Price Curve is 1 MW				
172	The minimum increment of load break quantities in Delay Contingency Raise Reserve Offer Price Curve is 1 MW				
a	Create new load bid	> AS-RU	> bid grid > edit > new row > update	select bid hour	
1		> AS-RD	> price curve > edit	new row > Qty = 0; P = 1000	
2		> AS-FR		new row > Qty = 0.9; P = 1000	
3		> AS-FL		> Update	
4		> AS-SR		> Submit bid	Bid not accepted with error message
5		> AS-SL			
6		> AS-DR			
7		> AS-DL			
173	Load: The Max Regulation Down Reserve Offer Quantity must not be greater than the registered Max Regulation Down Reserve Capacity for the Resource.				
189	Load: The Regulation Down Reserve Offer Price Curve must be monotonically increasing.				
a	Create new gen bid	> AS-RD	> bid grid > edit > new row > update	select bid hour	
1			> price curve > edit	new row > Qty = 0; P = 1000	
2				new row > Qty = 1; P = 1000	
3				new row > Qty = 2; P = 900	
4				new row > Qty = 9999; P = 1000	
5				> Update	
6				> Submit bid	Bid not accepted with error message for exceeding capacity and

Rule	Action	Action	Action	Action	Expected result
					not monotonically increasing
174	Load: The Max Regulation Up Reserve Offer Quantity must not be greater than the registered Max Regulation Down Reserve Capacity for the Resource.				
190	Load: The Regulation Up Reserve Offer Price Curve must be monotonically increasing.				
	Create new gen bid	> AS-RU	> bid grid > edit > new row > update	select bid hour	
			> price curve > edit	new row > Qty = 0; P = 1000	
				new row > Qty = 1; P = 1000	
				new row > Qty = 2; P = 900	
				new row > Qty = 9999; P = 1000	
				> Update	
				> Submit bid	Bid not accepted with error message for exceeding capacity and not monotonically increasing
175	Load: The Max Fast Contingency Lower Load Capacity must not be greater than the registered Max Fast Contingency Lower Load Capacity for the Resource.				
191	Load: The Fast Contingency Lower Reserve Offer Price Curve must be monotonically increasing.				
	Create new gen bid	> AS-FL	> bid grid > edit > new row > update	select bid hour	
			> price curve > edit	new row > Qty = 0; P = 1000	
				new row > Qty = 1; P = 1000	
				new row > Qty = 2; P = 900	
				new row > Qty = 9999; P = 1000	
				> Update	
				> Submit bid	Bid not accepted with error message for exceeding capacity and not monotonically increasing
176	Load: The Max Fast Contingency Raise Load Capacity must not be greater than the registered Max Fast Contingency Lower Load Capacity for the Resource.				
192	Load: The Fast Contingency Raise Reserve Offer Price Curve must be monotonically increasing.				

Rule	Action	Action	Action	Action	Expected result
	Create new gen bid	> AS-FR	> bid grid > edit > new row > update	select bid hour	
			> price curve > edit	new row > Qty = 0; P = 1000	
				new row > Qty = 1; P = 1000	
				new row > Qty = 2; P = 900	
				new row > Qty = 9999; P = 1000	
				> Update	
				> Submit bid	Bid not accepted with error message for exceeding capacity and not monotonically increasing
177	Load: The Max Slow Contingency Lower Load Capacity must not be greater than the registered Max Slow Contingency Lower Load Capacity for the Resource.				
193	Load: The Slow Contingency Lower Reserve Offer Price Curve must be monotonically increasing.				
	Create new gen bid	> AS-SL	> bid grid > edit > new row > update	select bid hour	
			> price curve > edit	new row > Qty = 0; P = 1000	
				new row > Qty = 1; P = 1000	
				new row > Qty = 2; P = 900	
				new row > Qty = 9999; P = 1000	
				> Update	
				> Submit bid	Bid not accepted with error message for exceeding capacity and not monotonically increasing
178	Load: The Max Slow Contingency Raise Load Capacity must not be greater than the registered Max Slow Contingency Lower Load Capacity for the Resource.				
194	Load: The Slow Contingency Raise Reserve Offer Price Curve must be monotonically increasing.				
	Create new gen bid	> AS-SR	> bid grid > edit > new row > update	select bid hour	
			> price curve > edit	new row > Qty = 0; P = 1000	
				new row > Qty = 1; P = 1000	
				new row > Qty = 2; P = 900	

Rule	Action	Action	Action	Action	Expected result
				new row > Qty = 9999; P = 1000	
				> Update	
				> Submit bid	Bid not accepted with error message for exceeding capacity and not monotonically increasing
179	Load: The Max Delayed Contingency Lower Load Capacity must not be greater than the registered Max Delay Contingency Lower Load Capacity for the Resource.				
195	Load: The Delayed Contingency Lower Reserve Offer Price Curve must be monotonically increasing.				
	Create new gen bid	> AS-DL	> bid grid > edit > new row > update	select bid hour	
			> price curve > edit	new row > Qty = 0; P = 1000	
				new row > Qty = 1; P = 1000	
				new row > Qty = 2; P = 900	
				new row > Qty = 9999; P = 1000	
				> Update	
				> Submit bid	Bid not accepted with error message for exceeding capacity and not monotonically increasing
180	Load: The Max Delayed Contingency Raise Load Capacity must not be greater than the registered Max Delay Contingency Lower Load Capacity for the Resource.				
196	Load: The Delayed Contingency Raise Reserve Offer Price Curve must be monotonically increasing.				
	Create new gen bid	> AS-DR	> bid grid > edit > new row > update	select bid hour	
			> price curve > edit	new row > Qty = 0; P = 1000	
				new row > Qty = 1; P = 1000	
				new row > Qty = 2; P = 900	
				new row > Qty = 9999; P = 1000	
				> Update	

Rule	Action	Action	Action	Action	Expected result
				> Submit bid	Bid not accepted with error message for exceeding capacity and not monotonically increasing
	LOAD RESOURCE VALIDATION RULES				
	FTR BID VALIDATION				
	FTR BID VALIDATION RULES				
	BID VALIDATION RULES				
	BID PROCESSING				
204	A Temporarily Valid Bid must undergo Bid Processing immediately after Bid Validation. A Temporarily Valid Bid that passes Bid Processing before the daily Master File update for the Trading Day specified in that Bid must become a Conditionally Valid Bid. A Temporarily Valid Bid that passes Bid Processing after the daily Master File update for the Trading Day specified in that Bid must become a Valid Bid. A Temporarily Valid Bid that fails Bid Processing before the daily Master File update for the Trading Day specified in that Bid must become a Conditionally Modified Bid. A Temporarily Valid Bid that fails Bid Processing after the daily Master File update for the Trading Day specified in that Bid must become a Modified Bid.				
					Untested - See explanation from PEMC
205	A Temporarily Valid Bid must undergo Bid Processing immediately after Bid Validation. A Temporarily Valid Bid that passes Bid Processing must become a Valid Bid. A Temporarily Valid Bid that fails Bid Processing must become a Modified Bid.				
					Untested - See explanation from PEMC
206	A Bid passes Bid Processing if all Bid Components in that Bid pass Bid Processing. A Bid fails Bid Processing if any Bid Component in that Bid fails Bid Processing.				
					A Bid passes Bid Processing if all Bid Components in that Bid pass Bid Processing. A Bid fails Bid Processing if any Bid Component in that Bid fails Bid Processing.
207	The Market Participant specified in a Bid must be notified of the status of that Bid and of any failed Bid Processing rules after Bid Processing.				
					The Market Participant specified in a Bid is notified of the status of that Bid and of any failed Bid Processing

Rule	Action	Action	Action	Action	Expected result
					rules after Bid Processing.
208	A Bid must include at least one of the following: a) a Self-Schedule Bid Component, b) an Energy Bid Component, c) an Ancillary Service Bid Component, or d) a Pumping Bid Component.				
	Create new gen bid > Submit bid				Bid not accepted with error message
	Create new load bid > Submit bid				Bid not accepted with error message
209	A Bid must include at least one of the following: a) a Self-Schedule Bid Component, b) an Energy Bid Component, c) an Ancillary Service Bid Component, or d) a Pumping Bid Component.				
					See rule #208
	GENERATING RESOURCE BID PROCESSING				
214	A Valid Bid or a Modified Bid must be promoted to a Clean Bid.				
					Untested - See explanation from PEMC
216	The Market Participant specified in a Generated Bid must be notified of that Generated Bid after Bid Generation.				
					Untested - See explanation from PEMC

Table 2 List of rules which couldn't be tested by IES

Rule	Rule	PEMC response
23	An authenticated user may do any of the following: a) submit offers and bids, b) submit self-scheduled nominations, c) submit nodal load forecasts (i.e. pump-storage plants during pump-mode), d) extract data (i.e. prices and schedules), e) receive advisories only for the registered resources for which the authenticated user is authorized.	You are already doing it since you are an authenticated user (as IES_01) that is capable of submitting offers/nominations/bids for your assigned resources. You are actually not able to submit offers/nominations/bids of other resources in the model. Note that you are participating in the Production System where all resources from Luzon to Mindanao are modelled.
37	A Daily Bid Component must include at least one Market Product.	You are actually doing this already in the User Interface. If you submit an offer with price curves for En, then it is already VALID (so as long there is a ramp rate as well). Another way of testing is to just Create a Bid, then immediately submit it without any price curves under any product. That should be INVALID.
39	A Daily Bid Component must undergo Bid Content Check immediately after its submission. A Submitted Bid that passes Bid Content Check must become an not accepted Bid. A Submitted Bid that fails Bid Content Check must become a not accepted Bid.	It checks if there is information appropriately submitted for the resource. One way to test this is that you submit a bid with price curves only but with no ramp rates. That should be rejected. Another case would be similar to rule #37.
40	A previously valid offer/bid must undergo Bid Content Check again after the Registration Data update for the Trading Day specified. A previously valid offer/bid that passes Bid Content Check must become an Accepted Bid. A previously valid offer/bid that fails Bid Content Check must become a Rejected Bid.	In order to test this, we should have offers for a certain generator GEN_XX for the next seven days. If today, it is registered to provide price curves, then on D+3, its registration is revised to provide Nominations only, then all previously submitted offers with price curves from D+3 and onwards shall be rejected.
78	The Generating Resource specified in a Generating Resource Bid must be registered as a Generating Resource for the Bid Period	We will have to test this by modifying their effective registration data. For example, GEN_XX is registered to be effective on D+4. You should not be able to submit an offer for GEN_XX from D to D+3.
79	The Generating Resource specified in a Generating Resource Bid must be certified for participation in the Market indicated by the and for the Bid Period specified in the Bid.	You can use 00COAL_01. It is registered for the market products EN, FR, and FL. If you try to submit for other market products, it should be INVALID.
97	The Generating Resource that has a Regulation Lower Offer must be effectively registered for the relevant Trading Day.	You can submit for 00DCCT_GT under market product (RD) with a capacity of 30 MW

Rule	Rule	PEMC response
101	The Generating Resource that has a Regulation Raise Offer must be certified for Regulation Raise for the Bid Period specified in that Bid and for that Online Generating Resource State.	You can submit for 00DCCT_GT under market product (RU) with a capacity of 30 MW
149	The Load Resource specified in the Load Resource Bid must be registered as a Load Resource for the Bid Period specified in the Bid.	Same as rule # 78, but this time for Loads
150	The Market Participant specified in a Load Resource Bid must be authorized to submit bids for the Load Resource and the Bid Period specified in the Bid.	Same as rule # 79, but this time for Loads
204	A Temporarily Valid Bid must undergo Bid Processing immediately after Bid Validation. A Temporarily Valid Bid that passes Bid Processing before the daily Master File update for the Trading Day specified in that Bid must become a Conditionally Valid Bid. A Temporarily Valid Bid that passes Bid Processing after the daily Master File update for the Trading Day specified in that Bid must become a Valid Bid. A Temporarily Valid Bid that fails Bid Processing before the daily Master File update for the Trading Day specified in that Bid must become a Conditionally Modified Bid. A Temporarily Valid Bid that fails Bid Processing after the daily Master File update for the Trading Day specified in that Bid must become a Modified Bid.	This is an internal process of the MPI application since every past midnight (daily), all previously submitted VALID offers are subjected to BID validation.
205	A Temporarily Valid Bid must undergo Bid Processing immediately after Bid Validation. A Temporarily Valid Bid that passes Bid Processing must become a Valid Bid. A Temporarily Valid Bid that fails Bid Processing must become a Modified Bid.	Same as rule # 204.
209	A Bid must include at least one of the following: a) a Self-Schedule Bid Component, b) an Energy Bid Component, c) an Ancillary Service Bid Component, or d) a Pumping Bid Component.	This is an internal process of the MPI application. It just wants to ensure that the bid being submitted is clean before passing to MDOM.

Rule	Rule	PEMC response
214	A Valid Bid or a Modified Bid must be promoted to a Clean Bid.	This is an internal process of the MPI application. It just displays the information of the status of the bid.
216	The Market Participant specified in a Generated Bid must be notified of that Generated Bid after Bid Generation.	This is an internal process of the MPI application since every past midnight (daily), all previously submitted VALID offers are subjected to BID validation.

Table 3 Rule 88 testing

Rule	Action	Action	Action	Action	Action
88	The first Quantity of the Pump Storage Price Curve must not be less than the registered Minimum Load Pump-Storage Resource.				
a	Create new gen (pump, min: 0 MW) bid	> Energy	> bid grid > edit > new row > update	select bid hour	
1			> battery/pumped storage price curve > edit	new row > Qty = -10; P = 1000	
2				new row > Qty = 0; P = 1000	
3				> Update	
4				> Submit bid	Bid not accepted with error message
b	Create new gen (battery, min: -60 MW) bid	> Energy	> bid grid > edit > new row > update	select bid hour	
1			> battery/pumped storage price curve > edit	new row > Qty = -10; P = 1000	
2				new row > Qty = 0; P = 1000	
3				> Update	
4				> Submit bid	Bid accepted

IES
Intelligent Energy Systems

5 August 2019

Mr. Felixberto U. Bustos, Jr.
Chairman, PEM Audit Committee
Philippine Electricity Market Corporation
18/F Robinsons Equitable Tower
ADB Avenue, Ortigas Center
1600 Pasig City, Philippines

Dear Mr. Bustos,

SCOPE OF THIS CERTIFICATE

The purpose of this software certificate is to confirm that the calculations and logic implemented in the Compliance Monitoring Module comprising the Dispatch Conformance Standards (DCS) and Offered Capacity Compliance system (OCC) are consistent with the calculations and logic specified in:

- Functional [Logical] Design for the Compliance Monitoring Module (CMON) of the new Market Management System Version 5, 25 July 2018 (CMON Functional Design Document); and
- A revision in the requirements from PEMC's Enforcement and Compliance Office. currently not reflected in the CMON Functional Design Document[1], applicable to the OCC.

The five (5) and four (4) key components of the CMON DCS and OCC modules, respectively that were tested against the CMON Functional Design Document are as follows:

CMON DCS

- **Non-Compliance Flag:** is used to highlight non-compliance of actual generation with respect to its dispatch target for each dispatch interval;
- **Non-Compliance Counter:** represents the consecutive count of Non-Compliance Flags for each dispatch interval subject to the Reaction Period and Probation Period considerations;
- **Probable Breach Flag:** indicates whether there is a breach and is based on the Non-Compliance Counter and Reaction Period at each dispatch interval;
- **Probation Flag:** is to highlight the status of ongoing Non-Compliance flags based on the Non-Compliance Counter or Probation Counters; and
- **Probation Counter:** is a running count of Probation Flag and resets back to 0 if the Probation Flag is "N".

[1] This relates to 0 MW nominations now considered as non-compliant for self-scheduled generator types.

CMON OCC

- **Non-Compliance Flag:** is used to highlight non-compliance of generator offers for each 5-minute dispatch interval, represented by a "N" and "Y" for a complying and non-complying offer, respectively.
- **Total Non-Compliance Counter:** represents the total number of Non-Compliance Flags in each trading hour comprised of the twelve 5-minute dispatch intervals.
- **Sequential Non-Compliance Counter:** is a running count of Non-Compliance Flags and resets back to 0 if the Non-Compliance Flag is "N".
- **Probable Breach Flag and Probable Breach Type:** indicates whether there is a breach and the type of breach identified.

TESTING METHODOLOGY USED FOR SOFTWARE CERTIFICATION

CMON DCS

For the five (5) software components of the CMON DCS module, the method used by IES to certify the calculations and logic of each was as follows:

- **Non-Compliance Flag**
    - For a target (end-of) dispatch interval, if the generating resource's actual dispatch is greater than its Upper Dispatch Target, then its Non-Compliance Flag shall be set to "Y". Otherwise, the Non-Compliance Flag shall be set to "N";
    - For a target (end-of) dispatch interval, if the generating resource's actual dispatch is lower than its Lower Dispatch Target, then its Non-Compliance Flag shall be set to "Y". Otherwise, the Non-Compliance Flag shall be set to "N"; and
    - If a generating resource is scheduled to provide a specified reserve type for a dispatch interval, the Non-Compliance Flag for that dispatch interval shall be set to "N".
- **Non-Compliance Counter**
    - For a relevant dispatch interval, if the generating resource Non-Compliance Flag was set to "Y", then the Non-Compliance Counter shall increment, which shall equal the Non-Compliance Counter of the previous dispatch interval plus one (1). Otherwise, it shall equal the Non-Compliance Counter of the previous dispatch interval;
    - If the generating resource's Non-Compliance Flag was set to "N", AND the Non-Compliance Counter of the previous dispatch interval was less than or equal to the Reaction Period value, then the Non-Compliance Counter for this dispatch interval shall be set to "0"; and
    - If the generating resource's Non-Compliance Flag was set to "N" in accordance with paragraph 2.4 of the CMON Functional Design Document, AND the

Probation Counter is equal to the Probation Period value set in paragraph 2.1, then the Non-Compliance Counter shall be set to "0".

- **Probable Breach Flag**
    - For a relevant dispatch interval, if the generating resource Non-Compliance Flag was set to "Y" in accordance with item 2.4 of this document, AND its Non-Compliance Counter value is greater than the Reaction Period value, then the Probable Breach Flag shall be set to "Y". Otherwise, it shall be set to "N".
- **Probation Flag**
    - The Probation Flag for a dispatch interval shall be set to "Y" if the Non-compliance Flag is set to "N"; and
        - the Non-compliance Counter is greater than the Reaction Period; or
        - the Probation Counter of the previous interval is Probation Period − 1.
        - Otherwise, the Probation Flag shall be set to "N".
- **Probation Counter**
    - For a relevant dispatch interval, if the generating resource Probation Flag was set to "Y", then the Probation Counter shall increment, which is equal to the Probation Counter of the previous dispatch interval plus one (1). Otherwise, it shall be reset to zero ("0").

These key areas were tested against a set of six (6) test cases with six (6) scenarios each, designed to exercise all calculation logic in the DCS computations including Special Resets and Exemptions. IEMOP executed each test case via the NMMS CMON module and returned the results to IES. Results for Non-Compliance Flag, Non-Compliance Counter, Probable Preach Flag, Probation Flag and Probation Counter and were independently calculated by IES for each dispatch interval and compared to the IEMOP test case results. Comparing the results formed the basis of validating whether the NMMS DCS compliance monitoring process was consistent with the rules specified in Section 2 of CMON Functional Design Document.

<u>CMON OCC</u>

For the four (4) software components of the CMON OCC module, the method used by IES to certify the calculations and logic of each was as follows:

- **Non-Compliance Flag**: determine whether the generator offer is compliant with respect to the rules and exceptions set out in the CMON Functional Design Document[2]. A "N" and "Y" flag corresponding to non-compliance is set and compared against the reported output from the system.
- **Total Non-Compliance Counter**: sum up the total number of Non-Compliance Flags (flagged as "Y") across the twelve dispatch intervals (5-minute intervals)

[2] Accounting for the revision from the PEMC's Enforcement and Compliance Office.

within each trading hour and compare against the reported output from the system.

- **Sequential Non-Compliance Counter:** calculate the running/consecutive count of Non-Compliance Flags and resets back to 0 if the Non-Compliance Flag is "N". This counter extends past the end of the trading hour into the next. This is compared against the reported output from the system.
- **Probable Breach Flag and Probable Breach Type:** based on the rules set out in the CMON Functional Design Document, determine whether there is a Probable Breach Flag and if so, the type of breach identified (Probable Breach Type). This is compared against the reported output from the system.

There were a total of 32 test cases that were tested against rules and exceptions specific to the various generation types that exist in the WESM: scheduled generators, self-scheduled generators, storages in combination with specific conditions such as outages, pumping mode, security limits and the ability to disable the OCC for specific resources (where applicable).

CERTIFICATION OF NMMS COMPLIANCE MONITORING MODULE WITH RESPECT TO REFERENCE DOCUMENTATION

The following is our certification of the extent to which the calculations and logic of the five (5) key components of the CMON DCS module (Non-Compliance Flag, Non-Compliance Counter, Probable Breach Flag, Probation Flag and Probation Counter) and the four (4) key components of the CMON OCC module (Non-Compliance Flag, Total Non-Compliance Counter, Sequential Non-Compliance Counter, Probable Breach Flag and Probable Breach Type) are consistent with the calculations and logic specified in:

- Functional [Logical] Design for the Compliance Monitoring Module (CMON) of the new Market Management System Version 5, 25 July 2018; and
- A revision in the requirements from PEMC's Enforcement and Compliance Office. currently not reflected in the CMON Functional Design Document.

"We believe that the calculations and logic of the five (5) key components of the CMON DCS module (Non-Compliance Flag, Non-Compliance Counter, Probable Preach Flag, Probation Flag and Probation Counter) and the four (4) key components of the CMON OCC module (Non-Compliance Flag, Total Non-Compliance Counter, Sequential Non-Compliance Counter, Probably Breach Flag and Probably Breach Type) are consistent with the calculations and logic specified in:

- *Functional [Logical] Design for the Compliance Monitoring Module (CMON) of the new Market Management System Version 5, 25 July 2018; and*
- *A revision in the requirements from PEMC's Enforcement and Compliance Office. currently not reflected in the CMON Functional Design Document."*

LIMITATION OF LIABILITY

In furnishing this certification, Intelligent Energy Systems specifically limits its liability in accordance with Clause 5.08 (b) of the Contract for External Audit Services (Independent Software audit of the New Market Management System) dated 17 February 2017, and that no person shall be entitled to claim against Intelligent Energy Systems, any losses or damage whether indirect, special or consequential, in excess of that limitation, and PEMC shall ensure that all persons or parties who may rely on this certification are aware of this limitation of liability.

Yours sincerely



Hugh Bannister
Chairman and CEO

IES
Intelligent Energy Systems

28 September 2018

Mr. Felixberto U. Bustos, Jr.
Chairman, PEM Audit Committee
Philippine Electricity Market Corporation
18/F Robinsons Equitable Tower
ADB Avenue, Ortigas Center
1600 Pasig City, Philippines

Dear Mr. Bustos

SCOPE OF THIS CERTIFICATE

The purpose of this software certificate is to confirm that the calculations and logic implemented in the New Market Management System (NMMS) Post Market Run Calculation (PMRC) module are consistent with the calculations and logic specified in:

- Price Determination Methodology (PDM) Manual V1.0, and
- PEMC Market System Design Specification (PEMC_DDS-MKT-0.3.1).

Six (6) software components of PMRC module were tested, as follows:

- **Trading Interval Price Calculator (TIPC):** TIPC calculates the Generator Node Trading Interval Price (GNTIP), or TIPC_LMP. The scope of the software certification was to confirm that the TIPC_LMP calculations were consistent with the formula specified in Section 3.5.1.1.2 of document PEMC-DDS-MKT-0.3.1.
- **Generator Weighted Average Price (GWAP) calculation:** The scope of the software certification was to confirm that the GWAP calculations were consistent with the formula specified in Section 3.5.1.2.1.2 of document PEMC-DDS-MKT-0.3.1.
- **Administered Prices (AP) calculation process:** The scope of certification for this software component was to confirm that: (a) the AP Generator Energy Price calculation was consistent with the formulas specified in Sections 7.2.4.a, 7.2.4.b, 7.2.5.a, 7.2.5.b, and 7.2.6 of the PDM and (b) the AP Customer Energy Price calculation was consistent with the formulas specified in Sections 7.3.1, 7.3.2, 7.3.3, and 7.3.4 of the PDM.
- **Secondary Price Cap (SEC) calculation process:** The scope of certification for this software component was to confirm that: (a) the SEC Generator Energy Price and SEC Customer Energy Price calculations were consistent with the formulas specified in Section 3.5.1.2.1 of document PEMC-DDS-MKT-0.3.1 and (b) the SEC was applied in accordance with the logic specified in Section 3.5.1.2.1 of document PEMC-DDS-MKT-0.3.1.
- **Price Substitution Method (PSM):** The scope of certification for this software component was to confirm that: (a) the Price Trigger Factor calculation was consistent with the formula specified in Section 6.2 of the PDM, (b) the PSM Generator Energy Price was determined in accordance with the method specified in Section 6.3 of the PDM, (c) the PSM Customer Energy Price calculation was consistent with the formula

specified in Section 6.4 of the PDM and (d) the PSM Generator Reserve Price calculation was consistent with the formula specified in Section 6.5 of the PDM.

- **Price Adjustment Prioritisation (PAP) (combination of AP, SEC and PSM):** The software certification scope for this component was to determine if the PAP logic has been implemented consistently with the method specified in Section 3.5.1.1 of document PEMC-DDS-MKT-0.3.1.

CERTIFICATION TESTING METHODOLOGY

For the six (6) software components of the PMRC module, the method used by IES to certify the calculations and logic of each was as follows:

- **TIPC:** IES independently calculated the TIPC_LMP using the formula specified in Section 3.5.1.1.2 of document PEMC-DDS-MKT-0.3.1 based on sample data that was provided to IES by PEMC. The IES calculated values for TIPC_LMP were then compared to the results of the NMMS PMRC TIPC component.
- **GWAP calculation:** IES independently calculated the GWAP using the formula specified in Section 3.5.1.2.1.2 of document PEMC-DDS-MKT-0.3.1 based on sample data that was provided to IES by PEMC. The IES calculated values for GWAP were then compared to the results of the NMMS PMRC GWAP component.
- **AP calculation process:** Based on sample data that was provided to IES by PEMC, IES independently calculated (a) the AP Generator Energy Price according to the formulas specified in Sections 7.2.4.a, 7.2.4.b, 7.2.5.a, 7.2.5.b, and 7.2.6 of the PDM and (b) the AP Customer Energy Price according to the formulas specified in Sections 7.3.1, 7.3.2, 7.3.3, and 7.3.4 of the PDM. The IES results were then compared to the results of the NMMS PMRC AP component.
- **SEC calculation process:** Based on sample data that was provided to IES by PEMC, IES independently calculated: (a) the SEC Generator Energy Price and SEC Customer Energy Price according to the formulas specified in Section 3.5.1.2 of document PEMC-DDS-MKT-0.3.1 and (b) applied the SEC in accordance with the logic specified in Section 3.5.1.2 of document PEMC-DDS-MKT-0.3.1. The IES results were then compared to the results of the NMMS PMRC SEC component.
- **PSM:** Based on sample data that was provided to IES by PEMC, IES independently: (a) calculated the Price Trigger Factor in accordance with the formula specified in Section 6.2 of the PDM, (b) determined the PSM Generator Energy Price in accordance with the method specified in Section 6.3 of the PDM, (c) calculated the PSM Customer Energy Price in accordance with the formula specified in Section 6.4 of the PDM and (d) calculated the PSM Generator Reserve Price in accordance with the formula specified in Section 6.5 of the PDM. The IES results were then compared to the results of the NMMS PMRC PSM component.
- **PAP:** IES independently applied the PAP logic in accordance with the method specified in Section 3.5.1.1 of document PEMC-DDS-MKT-0.3.1 based on sample data that was

provided to IES by PEMC. The IES results were then compared to the results of the NMMS PMRC PAP component.

CERTIFICATION OF NMMS PMRC SOFTWARE MODULE WITH RESPECT TO REFERENCE DOCUMENTATION

The following is our certification of the extent to which the calculations and logic of the six (6) software components of the NMMS PMRC module; TIPC, GWAP calculation, AP calculation process, SEC calculation process, PSM, and PAP; are consistent with the calculations and logic specified in:

- Price Determination Methodology (PDM) Manual V1.0, and
- PEMC Market System Design Specification (PEMC_DDS-MKT-0.3.1)

"We believe that the calculations and logic of the six (6) software components of the NMMS PMRC module; TIPC, GWAP calculation, AP calculation process, SEC calculation process, PSM, and PAP; are consistent with the calculations and logic specified in:

- *Price Determination Methodology (PDM) Manual V1.0, and*
- *PEMC Market System Design Specification (PEMC_DDS-MKT-0.3.1)"*

LIMITATION OF LIABILITY

In furnishing this certification, Intelligent Energy Systems specifically limits its liability in accordance with Clause 5.08 (b) of the Contract for External Audit Services (Independent Software audit of the New Market Management System) dated 17 February 2017, and that no person shall be entitled to claim against Intelligent Energy Systems, any losses or damage whether indirect, special or consequential, in excess of that limitation, and PEMC shall ensure that all persons or parties who may rely on this certification are aware of this limitation of liability.

Yours sincerely



Hugh Bannister
Chairman and CEO

IES
Intelligent Energy Systems

19 November 2019

Mr. Felixberto U. Bustos, Jr.
Chairman, PEM Audit Committee
Philippine Electricity Market Corporation
18/F Robinsons Equitable Tower
ADB Avenue, Ortigas Center
1600 Pasig City, Philippines

Dear Mr. Bustos

SCOPE OF THIS CERTIFICATE

This software certificate relates to Component 6 of the Wholesale Electricity Spot Market (WESM) New Market Management System (NMMS) audit and the audit of Load Forecasting module.

The software testing specifically focused on assessing the accuracy of load forecasts at the nodal level for each process: Real-Time Dispatch (RTD), Hour-Ahead Projection (HAP), Day-Ahead Projection (DAP), and Week-Ahead Projection (WAP).

This certificate only pertains to the RTD forecasts and certifies that the RTD forecasts are consistent with the objective of providing accurate load forecasts[1].

CERTIFICATION TESTING METHODOLOGY

The scope of Component 6 was to assess the level of nodal forecasting accuracy[2].

We have carried out an assessment of the demand forecast performance based on information provided only for the period from 26/05/2019 to 25/08/2019 (Coverage Period), and therefore have not assessed the performance for all months over a 1-year period[3]. The methodology was to certify that the load forecasts were consistent with the provision of accurate net load forecasts as required by WESM Rules Clause 3.5.4.

In summary our methodology was as follows:

1. Computing the forecast error metrics:
    - A forecast run will produce a forecast for each active node for each time-ahead period at a specific resolution. Each of these forecasts was compared with the actual snapshot load. For example: the RTD is run at 1:00 pm to produce forecasts at 1:05 pm[4]. This forecast is compared to the actual snapshot load for the 5-minute period ending 1:05 pm.

[1] A separate certificate will be issued for the HAP/DAP/WAP processes.

[2] The SCADA system data quality, ICCP system and other processes that determine the real-time data upon which the forecasts are computed are beyond the scope of Component 6.

[3] Our assessments assume that the Coverage Period is a reasonable indicator of future performance.

[4] The RTD is technically run 10-minutes prior to the forecast interval (i.e. at 12:55pm) to ensure the results are ready at 1pm.

[redacted]

- Metrics and distributions of the forecast errors was calculated based on the actual snapshot load and forecast load to provide point statistics (such as average) and to describe the load forecasting accuracy variations to identify whether there were any issues with bias in the forecasts. This process was repeated across all forecasts run during the Coverage Period.

2. Comparison against other forecasts for relative accuracy:

   - Figures were then compared to load forecast accuracy levels of the New Zealand Electricity Market (NZEM) for context and compared against the accuracy of the current ABB MMS forecasts[5].
   - Another comparison that IES carried out was to compare the RTD forecast to a "naïve forecast" where we assume that the next 5-minute nodal forecast is equal to the latest available measurement from the period before.
   - The metrics that were adopted are based on those that are used in other electricity markets to assess the accuracy of demand forecasts. We calculate the same metrics for the Siemens NMMS forecasts as we do for other selected electricity markets (New Zealand) and the ABB MMS, and also reviewed it within a Risk Rating Framework. This enables us to form a view on whether the load forecasting system accuracy is suitable for real-time use and to identify whether improvements are needed.

CERTIFICATION OF NMMS LOAD FORECASTING ACCURACY

The audit results show that the RTD forecasts are comparable in accuracy with the New Zealand Electricity Market (NZEM), and are an improvement over the existing demand forecasts used in the ABB MMS. Since both choices of the above benchmarks represent markets that are in operation, then in IES's opinion, based on the data that was provided by IEMOP to IES for assessment, the 5-minute nodal forecasts algorithm is producing results with accuracies that are sufficient to go live with the NMMS[6].

Underlying our assessment is the assumption that the demand forecasting software and methodology that produced the results IEMOP furnished to IES is a faithful representation of the software that would be used when the NMMS goes live. If any significant changes are made to the methodology and software, then we are not able to guarantee the demand forecasting software would produce better or worse results compared to what we have assessed.

> *"As such we believe that the RTD forecasts are consistent with providing an accurate load forecasts and are ready for production."*

[5] ABB's system produces hour-ahead forecasts whereas the NMMS produces 5-minute head forecasts.

[6] Recommendations to further improvements to the forecasting accuracy has been provided to IEMOP for consideration.

LIMITATION OF LIABILITY

In furnishing this certification, Intelligent Energy Systems specifically limits its liability in accordance with Clause 5.08 (b) of the Contract for External Audit Services (Independent Software audit of the New Market Management System) dated 17 February 2017, and that no person shall be entitled to claim against Intelligent Energy Systems, any losses or damage whether indirect, special or consequential, in excess of that limitation, and IEMOP shall ensure that all persons or parties who may rely on this certification are aware of this limitation of liability.

Yours sincerely

[redacted]

Hugh Bannister
Chairman and CEO

[redacted]

TIMOTHY DONALD SOMERVILLE
Notary Public



IES
Intelligent Energy Systems

19 November 2019

Mr. Felixberto U. Bustos, Jr.
Chairman, PEM Audit Committee
Philippine Electricity Market Corporation
18/F Robinsons Equitable Tower
ADB Avenue, Ortigas Center
1600 Pasig City, Philippines

Dear Mr. Bustos

SCOPE OF THIS CERTIFICATE

This software certificate relates to Component 6 of the Wholesale Electricity Spot Market (WESM) New Market Management System (NMMS) audit relating to Load Forecasting module.

The software testing specifically focused on assessing the accuracy of load forecasts at the nodal level for each process: Real-Time Dispatch (RTD), Hour-Ahead Projection (HAP), Day-Ahead Projection (DAP), and Week-Ahead Projection (WAP).

This certificate is concerned with only HAP, DAP and WAP load forecasting. It certifies that only the HAP forecasts are consistent with the objective of providing accurate load forecasts[1].

The present implementation of the DAP and WAP load forecasts in the NMMS' current implementation are not ready for production use until further improvements to the load forecasting methodology have been made.

CERTIFICATION TESTING METHODOLOGY

The scope of Component 6 software certification was to assess the level of nodal forecasting accuracy[2]. We have carried out an assessment of the demand forecast performance based on the period from 26/08/2019 to 25/10/2019[3] (Coverage Period), and therefore have not assessed the performance for all months over a 1-year period[4]. The methodology to certify that the load forecasts were consistent with providing accurate net load forecasts, outlined in WESM Rules Clause 3.5.4, is summarised below.

1. Computing the forecast error metrics:
    - A forecast run will produce a forecast for each active node for each time-ahead period at a specific resolution. Each of these forecasts was compared with the actual snapshot load. For example: the 1:00 pm HAP run at 12:55 pm to produce forecasts at 1:00 pm for the 1:05 pm, 1:10 pm ... 1:55 pm, 2:00 pm intervals.

[1] Separate certificate is issued for the RTD process.

[2] The SCADA system data quality, ICCP system and other processes that determine the real-time data upon which the forecasts are computed are beyond the scope of Component 6.

[3] Improvements for DAP and WAP over previous Coverage Period and used in final results

[4] Our assessments assume that the Coverage Period is a reasonable indicator of future performance.

[redacted]

This forecast is compared to the corresponding actual snapshot load for the 5-minute period ending at 1:05 pm, 1:10 pm ... 1:55 pm, 2:00 pm.

- Metrics and distributions of the forecast errors was calculated based on the actual snapshot load and forecast load to provide point statistics (such as average) and to describe the load forecasting accuracy variations to identify whether there were any issues with bias in the forecasts. This process was repeated across all forecasts run during the Coverage Period.

2. Comparison against other forecasts for relative accuracy:
   - Where applicable, statistics of load forecasting accuracy were then compared to load forecast accuracy levels of the New Zealand Electricity Market (NZEM) for context and compared against the accuracy of the current ABB MMS forecasts[5].
   - Another comparison that IES carried out was to compare the WAP forecast to a "naïve forecast" where we assume that the next week-ahead nodal forecast is equal to the previous week's nodal loads.
   - The metrics that were adopted are based on those that are used in other electricity markets to assess the accuracy of demand forecasts. We calculate the same metrics for the Siemens NMMS forecasts as we do for the NZEM and the ABB MMS, and also reviewed it within a Risk Rating Framework. This enables us to form a view on whether the load forecasting system accuracy is suitable for real-time use and to identify whether improvements are needed.
3. Risk Rating
   - Each of the process is given a level of importance based on the possible negative impact resulting from poor forecasting accuracy.
   - The probability that forecasts exceed an error threshold is calculated on each process by region, separated by different time-ahead categories.
   - An overall risk rating is achieved by weighting each time category with near-term forecasts having greater weighting as they are more important. The Risk Rating matrix, presented in the table below, forms the basis of IES's recommendation.

Risk Rating	Description
Low	Low probability of inaccuracy. Acceptable for NMMS to go live without IEMOP needing to make any further improvements.
Medium	Medium probability of inaccuracy but acceptable for NMMS to go live. Will not materially impact participant decision-making in terms of market outcomes – i.e. magnitude of inaccuracies not significant.
Significant	High probability of inaccuracy and if used in the market there is a high risk that participant decision-making will be negatively impacted with poor results. Recommend improvements to be made before go live or an acceptable workaround be implemented.

[5] Comparison of NMMS WAP forecasts against the ABB system was not done.

Risk Rating	Description
Critical	Unacceptably high probability of errors and not suitable for use in the market without substantial improvements.

CERTIFICATION OF NMMS LOAD FORECASTING ACCURACY

The audit results show that the HAP forecasts are comparable in accuracy with other electricity markets (New Zealand). The results from the DAP and WAP show that near-term forecasts (such as 1-hour) have high forecasting accuracy but significantly reduces as the time-ahead basis increases.

The rating the HAP was a Medium risk rating across both regions, whereas the DAP and WAP process were rated a Medium risk in Luzon but Significant risk in Visayas. Under these risk ratings, IES believe it is acceptable for the HAP to go live, whereas the DAP and WAP processes would require further improvements to avoid negative consequences resulting from low forecasting performance.

We assume that the demand forecasting software and methodology that produced the results IEMOP provided to IES is a faithful representation of what would be implemented in practice – if any significant changes to the methodology are introduced then we are not able to guarantee the demand forecasting software would produce better or worse results compared to what we have assessed.

> *"As such we believe that the HAP forecasts are consistent with providing an accurate load forecasts and are ready for production. We recommend that the DAP and WAP forecasting methodology be improved or a workaround be implemented due to the risk that market participants may be negatively affected in its current state."*

LIMITATION OF LIABILITY

In furnishing this certification, Intelligent Energy Systems specifically limits its liability in accordance with Clause 5.08 (b) of the Contract for External Audit Services (Independent Software audit of the New Market Management System) dated 17 February 2017, and that no person shall be entitled to claim against Intelligent Energy Systems, any losses or damage whether indirect, special or consequential, in excess of that limitation, and IEMOP shall ensure that all persons or parties who may rely on this certification are aware of this limitation of liability.

Yours sincerely

[redacted]

Chairman and CEO

[redacted]

TIMOTHY DONALD SOMERVILLE
Notary Public



IES
Intelligent Energy Systems

26 January 2019

Mr. Felixberto U. Bustos, Jr.
Chairman, PEM Audit Committee
Philippine Electricity Market Corporation
18/F Robinsons Equitable Tower
ADB Avenue, Ortigas Center
1600 Pasig City, Philippines

Dear Mr. Bustos

SCOPE OF THIS CERTIFICATE

This software certificate relates to Component 8 of the Wholesale Electricity Spot Market (WESM) New Market Management System (NMMS) audit pertaining to the compliance of Market Operations Archiving Repository (MOAR) component for Market Publications. This letter certifies that the published information in the MOAR database is consistent with the relevant provisions of the WESM Rules and Manuals and that all of the data associated with market operations, including all projections, is captured and stored in the MOAR database.

The certification covers two categories of data:

1) All clauses in Chapter 3 of the WESM Rules and Manuals where it is specified that certain market data are to be published.
2) Information that IES recommends be published according to best practices. This includes Post Market Run Calculation (PMRC) and Compliance Monitoring (CMON) Module data. The publication of this data in the MOAR database supports a transparent electricity market and adheres to the basic principles of market publication that:
    a. All inputs of all market processes are published;
    b. All outputs of all market processes are published; and
    c. All versions of all executions of the market processes are published.

CERTIFICATION TESTING METHODOLOGY

The methodology used by IES to certify that the data was published in accordance with the WESM Rules and best practices and did not contain missing data was as follows:

- The specified market data as per Chapter 3 of the WESM Rules was collated into a checklist and provided to IEMOP. In response, IEMOP then provided the MOAR database and storage location (table and field) of each data item in the checklist.

- IES confirmed that each data item of the checklist was included in the MOAR database design. This was done by confirming the MOAR storage location specified by IEMOP, which was done by either:
    - Checking that the storage location existed in a sample of the MOAR database provided to IES by IEMOP;
    - Checking that the storage location was specified in the MOAR Entity Relationship Design; or
    - Checking that the storage location was specified in supplementary documentation provided to IEMOP by IES.
- IES ran queries on a sample of the database from the NMMS production system, to confirm that the data was being populated to the tables in the way expected. The queries were run on extracts of the MOAR database that IEMOP provided to IES. The queries focused on confirming that the database tables were being populated properly and included the following:
    1. Checks to ensure that all tables were populated with data, with date-time ranges consistent for the sample of period of data;
    2. For market projections (HAP, DAP, WAP): ensuring that all results span the expected ranges of each individual projection;
    3. For DAP: ensuring that the results of the sensitivities are being properly populated;
    4. For PMRC calculations: ensuring that all expected values are appearing in the relevant tables;
    5. Carrying out record counts with date-time ranges to ensure that all periods of time are accounted for and for example, there are no dispatch periods or trading periods that are missing;
    6. Checks to ensure that the number of resource identifiers (and other relevant unique identifiers) in the database matches the expected numbers;
    7. Checks to ensure that there is consistency of data (count of unique identifiers) in all input and output tables; and
    8. Checks to ensure that there is consistency in the data (count of unique identifiers) between input and output tables.

It should be emphasized that the focus of these checks was strictly to inspect the *presence* of data in the database in accordance with the scope of this certificate. The *correctness* of the data is the focus of other areas of the software audit.

CERTIFICATION OF DATA PUBLISHED IN THE MOAR DATABASE WITH RESPECT TO REFERENCE DOCUMENTATION

The audit results show that the MOAR database has been designed in a way that is consistent with the publication requirements in the WESM Rules and IES recommended best practice, and is correctly populated. This means that all data items that were identified in the IES developed checklist could be identified in the MOAR design documents. IES has confirmed by inspection that each was included in the MOAR database design. The queries performed on the sample MOAR database also led to IES concluding that the MOAR database is being correctly populated as long as there aren't any process failures.

"As such, we believe the MOAR database design and populated data, as part of the NMMS market publication audit component, passes the requirements specified in clauses of Chapter 3 of the WESM Rules and meets best practices according to IES ".

LIMITATION OF LIABILITY

In furnishing this certification, Intelligent Energy Systems specifically limits its liability in accordance with Clause 5.08 (b) of the Contract for External Audit Services (Independent Software audit of the New Market Management System) dated 17 February 2017, and that no person shall be entitled to claim against Intelligent Energy Systems, any losses or damage whether indirect, special or consequential, in excess of that limitation, and IEMOP shall ensure that all persons or parties who may rely on this certification are aware of this limitation of liability.

Yours sincerely



Hugh Bannister
Chairman and CEO

Appendix A.2 – Software Certificates for Audit of NMMS enhancements/fixes

IES
Intelligent Energy Systems

23 September 2020

Mr. Felixberto U. Bustos, Jr.
Chairman, PEM Audit Committee
Philippine Electricity Market Corporation
18/F Robinsons Equitable Tower
ADB Avenue, Ortigas Center
1600 Pasig City, Philippines

Dear Mr. Bustos,

SCOPE OF THIS CERTIFICATE

The purpose of this software certificate is to confirm that the enhancements and fixes to the New Market Management System (NMMS), in accordance with the requirements of the Terms of Reference dated 19 September 2019, are consistent with the relevant documents specified in each section below.

Enhancements: Enhancements related to larger changes in the functionality of the NMMS.

- **EN#01: Switchable use of SCADA for Market Applications (SUSMA):** The purpose of this software certification is to confirm that the MDOM uses the latest real-time information from ICCP-SCADA-HIS instead of the State-Estimator (SE). This was implemented to overcome the issue of SE non-convergence. This was assessed against the following rules and procedures:
    - WESM Rules (Revised for Enhanced Market Operations); and
    - Siemens, Development Design Specification, "IEMOP-DDS-SUSMA-02.3", 10 July 2019.
- **EN#02: Separate Workflow for Substitution of RTD with HAP**: The purpose of this software certification is to confirm that, in instances where RTD solutions are unavailable, the latest HAP results can be used as a substitute. This was assessed against the following requirements:
    - WESM Rules (Clause 3.4.1);
    - PDM (Clause 4.4.5);
    - Dispatch Protocol v13 (Section 4.6); and
    - Siemens Design Document: "RTD HAP Substitution – RHS" (IEMOP-DDS-RHS-02.21).
- **EN#03 Post-Market Run Calculations for Mindanao Separation of Prices:** The purpose of this software certification is to ensure that the Post-Market Run Calculations (PMRC) are calculated correctly in consideration for the fact that Mindanao is physically isolated from the rest of the Philippine power system and to ensure the calculations are compliant with:
    - WESM Rules (Clause 10.5);

- Revised PDM with separate Mindanao prices; and
- Siemens, Development Design Specification, "Mindanao Separation of Prices", 25 April 2019.

- **EN#04: Market Re-Runs:** The purpose of this software certification is to review the Market Re-Run (MRR) facility, which is invoked by the Market Operator in cases where the RTD run had anomalous inputs, or is believed to be in error, even after automatic pricing re-run has been applied. The certification is to ensure that MRRs comply with the following:
  - CVC / MRR Manual;
  - Siemens Design Doc: "Manual Market Re-Run – MRR" (PEMC-DDS-Manual_Market_Rerun_02.01.pdf); and
  - WESM Rules.
- **EN#05: Enhancements to MPI**: The objective is to certify that the improvements to the MPI (some of which are purely aesthetic) have been implemented and working as intended with reference to the following:
  - Miscellaneous UI Modifications on the MPI.

Fixes: Fixes related to correcting identified issues in the NMMS platform. The assessment criterion was whether or not each fix has been implemented and is working as intended in accordance with the specification of the "fix" and with the general intent of WESM rules. The fixes correspond to change requests issued by IEMOP to Siemens in the period from 11 July 2019 to 24 September 2019[1].

- **FX#01: WAP/DAP/HAP Failure when Generator has Simultaneous Reserve Offer & Security Limit:** This part of software certification is to confirm that the issue relating to "MDOM failing for the Market Projection Processes (i.e. HAP, DAP and WAP) whenever a generator has submitted a reserve offer while being imposed with a security limit" has been fixed.
- **FX#02: Generator Scheduled in WAP and DAP with No Offer or Security Limit**: This part of the software certification is to confirm that the issue relating to instances where "a generator is scheduled in WAP and DAP even if it had no offers nor imposition of security limits" has been fixed.
- **FX#03: No HVDC Data in WAP/DAP/HAP/RTD CSV files**: IEMOP sends CSV files to the SO for every market run containing the MW schedules for generators and loads, both for energy and ancillary service. The CSV files also contain information on HVDC MW power flows, where the issue was that it has previously registered zero values in the files. The software certification is to confirm that this issue had been corrected.
- **FX#04: Use of Energy Component in PSM Unconstrained MCP**: Previous implementation of the PSM in PMRC (DIPC) showed that it was not using the

[1] Request for Fixes on NMMS Functionality – Part 1 through to Part 4.

correct inputs from MDOM in terms of the highest cleared offer price in an unconstrained solution. Further logic was added to identify the price-setting generator more correctly in an unconstrained solution. This software certification confirms the fix to the issue with respect to the following:

  - Enhanced WESM Rules; and
  - CVC / MRR Manual.

- **FX#05: Extremely High Prices even after Automatic Pricing Re-Runs:** There were a few times where CVCs are appearing in some nodes even after the automatic pricing re-run has been invoked. The high prices were caused by the SUSMA enhancement creating an entirely different set of initial conditions, therefore reflecting ramp-limited generators and resulting in a significant deficit in supply. Eventually, this affected how the automatic pricing run re-optimizes the solution after relaxing the constraints. The purpose of this software certification is to confirm that Siemens' deployment of a fix on 07 February 2020 has resolved the "SUSMA Enhancement Issue" in accordance with the following:
  - Enhanced WESM Rules; and
  - CVC / MRR Manual.
- **FX#06: DAP/HAP Runs Encountering MIP Infeasibility Error:** The purpose of this certification is to verify that the issues relating to continuous failures in DAP and HAP have been fixed. These issues included:
  - Power flow convergence failures which relate to the timing of the transfer of offers from MPI to HAP-MDOM.
  - An issue arising when a scheduled generator that is offering in one hour and then has no offer in the next hour.
  - An issue when there is a resource with dynamic ramping cannot ramp down from the projected initial condition down to its maximum offer quantity.
- **FX#07: HVDC Error Raised in Market Runs when there is a Zero Schedule for HVDC Link:** The purpose of this software certification is to confirm that the issue with "an error message being raised inappropriately in instances with zero HVDC" has been fixed.
- **FX#08: Inconsistency in Data Published in MOAR and CSV Files:** The purpose of this software certification is to confirm that the CSV files IEMOP published to the SO are consistent with data found in the NMMS.
- **FX#09: XML Nominations Not Matching Input Data in MPI**: The purpose of this software certification is to verify the correctness of the fix applied to XML-based submission of nominations to the MPI. The original implementation assumed XML nominations corresponded to the start time of dispatch interval rather than its end time.

TESTING METHODOLOGY USED FOR SOFTWARE CERTIFICATION

The method used by IES to certify the logic and calculations of each NMMS enhancement and NMMS fix were as follows:

Enhancements

- **EN#01: Switchable use of SCADA for Market Applications (SUSMA):** The methodology was based on: 1) a review to ensure that the SCADA data, transferred from PI Historian to MDOM in the form of the MDOM snapshots is faithfully represented in the RTD runs, and 2) to ensure that circuit breaker statuses in the MDOM are updated correctly and consistently when the breaker statuses change.
- **EN#02: Separate Workflow for HAP & RTD:** The testing methodology involved checking the HAP and RTD schedules under different scenarios to confirm that the HAP results were being used to substitute for RTD results in instances where RTD fails. Scenarios were:
    - RTD and HAP confirmed to be operating normally;
    - RTD was put into a mode of failure while HAP operated as normal;
    - After a period of time, HAP was then put into a mode of failure as well;
    - After more than 1 hour of HAP having been in a mode of failure, we confirmed that the market was in a state of intervention in DIPC (as the HAP results of the 1 hour horizon were all used, thus leaving no substitutes for RTD);
    - HAP was then put back into operation, and confirmed to again substitute for RTD; and
    - RTD was put into operation, to confirm that the substitutions were no longer occurring.
- **EN#03: Mindanao Separation of Prices:** IES independently calculated the pricing condition flags and the final DIPC price in accordance with the documentation provided to validate the values with the provided outputs from the DIPC.
- **EN#04: Market Re-Runs:** IES reviewed the baseline RTD execution and the market re-run execution resulting from a change in inputs. This was done for a number of different test cases, with each test case implementing a different input value. The market re-run output was checked for consistency with the energy market.
- **EN#05: Enhancements to MPI:** IES logged into the MPI User Interface and check that each change and enhancement is observed to be correctly implemented. The review only covered whether the implementation has been performed and working correctly and does not cover buttons unrelated to the enhancements.

Fixes

- **FX#01: WAP/DAP/HAP Failure when Generator has Simultaneous Reserve Offer & Security Limit:** The testing involved a combination of witness tests and some

supporting data analysis. IES reviewed the save case where the issue occurred for confirmation. We then checked to ensure that the problem had been rectified with the new software release for each of the WAP, DAP and HAP runs.

- **FX#02: Generator Scheduled in WAP and DAP with No Offer or Security Limit:** The testing involved a combination of witness testing and data dumps for different scenarios including a re-execution of a case that manifested the error, as well as running additional test cases on the current implementation to confirm that the issue had been fixed.
- **FX#03: No HVDC Data in WAP/DAP/HAP/RTD CSV files:** The purpose of the testing was to confirm that HVDC MW schedule data are included in the CSV files and are consistent with EMDB data (IEMOP's NMMS repository). This was done by checking that the HVDC data were included in the CSV file and were also consistent with the EMDB data.
- **FX#04: Use of Energy Component in PSM Unconstrained MCP:** IEMOP provided two test cases for which IES checked the logic to verify that the values were as expected. A reviewe of the output results confirmed that the marginal unit was correctly identified.
- **FX#05: Extremely High Prices even after Automatic Pricing Re-Runs:** The testing methodology covered the execution of two test cases, then analysing the outputs of each to ensure that the issue has been fixed. This included a re-execution of an old save case that manifested the issue using the updated software to compare the two outputs (before the fix and after the fix). A new case was also generated in real-time where CVC was expected to occur.
- **FX#06: DAP/HAP Runs Encountering MIP Infeasibility Error:** The testing methodology required IEMOP to provide screenshots and files to show the failed runs and corresponding screens after the implementation of the fix. IES checked the files to confirm that the issue has been fixed and implemented correctly.
- **FX#07: HVDC Error Raised in Market Runs when there is a Zero Schedule for HVDC Link:** The testing method was based on witness testing on dispatch intervals with 0 MW HVDC using the old and updated software to confirm the fix has been implemented correctly.
- **FX#08: Inconsistency in Data Published in MOAR and CSV Files:** The methodology to confirm that the issue has been fixed was to compare the data in the CSV files and corresponding data in the MDOM save cases for consistency.
- **FX#09: XML Nominations Not Matching Input Data in MPI:** The testing methodology was for IEMOP to provide a sample XML nomination file. IES then made edits to the file for upload into the MPI. IES then checked that the edited XML files were correctly reflected in the MPI. That is, values uploaded into the MPI through the XML file were treated as being on the end-time of the dispatch interval.

CERTIFICATION OF NMMS SOFTWARE MODULES WITH RESPECT TO REFERENCE DOCUMENTATION

Enhancements

The audit results show that the enhancements to the NMMS modules are correctly implemented and are consistent with the relevant rules and procedures. The following is our certification that the enhancements to the NMMS modules adhere to the relevant documentation:

"We believe that the logic and, where applicable, the calculations implemented in the enhancement of the NMMS modules referred to above are consistent with the logic and calculations specified in the following:

- *WESM Rules*
- *Revised PDM*
- *CVC / MRR Manual*
- *Relevant Development Design Specification Documents*
- *Miscellaneous UI Modifications for MPI "*

Fixes

The audit results show that the fixes made to the NMMS Modules are consistent with IEMOP variance requests and that the functionality is consistent with the expected operation. The following is our certification that the fixes to the specific functionality in the NMMS modules outlined above are consistent with expected operations:

"We believe that the logic and, where applicable, the calculations implemented in the fixes to the NMMS modules referred to above are consistent with the following:

- *WESM Rules*
- *Revised PDM*
- *IEMOP variance request - Request for Fixes on NMMS Functionality Covered by Maintenance Services Agreement*
    - *SR-001_Request for NMMS Fixes Covered by Maintenance Services Agreement.pdf, Date Requested - 11 July 2019*
    - *SR-002_Request for NMMS Fixes Covered by Maintenance Services Agreement.pdf, Date Requested - 8 August 2019*
    - *SR-003_Request for NMMS Fixes Covered by Maintenance Services Agreement.pdf, Date Requested - 27 August 2019*
    - *SR-004_Request for NMMS Fixes Covered by Maintenance Services Agreement.pdf, Date Requested - 24 September 2019*
- *Expected operations and functionality of NMMS Module"*

LIMITATION OF LIABILITY

In furnishing this certification, Intelligent Energy Systems specifically limits its liability in accordance with Clause 5.08 (b) of the Contract for External Audit Services (Independent Software audit of the New Market Management System) dated 17 February 2017, and that no person shall be entitled to claim against Intelligent Energy Systems, any losses or damage whether indirect, special or consequential, in excess of that limitation, and PEMC shall ensure that all persons or parties who may rely on this certification are aware of this limitation of liability.

Yours sincerely



Hugh Bannister
Chairman and CEO

Appendix A.3 – Software Certificates for Audit of Retesting of Load Forecasting Module

IES
Intelligent Energy Systems

4 March 2020

Mr. Felixberto U. Bustos, Jr.
Chairman, PEM Audit Committee
Philippine Electricity Market Corporation
18/F Robinsons Equitable Tower
ADB Avenue, Ortigas Center
1600 Pasig City, Philippines

Dear Mr. Bustos

SCOPE OF THIS CERTIFICATE

The purpose of this software certificate issued by Intelligent Energy Systems (IES) relates to the Audit of the Enhancements to the New Market Management System (NMMS) and Central Registration and Settlement System (CRSS). Specifically, it addresses whether the Load Forecasting module delivers forecasts more accurate than the module previously tested and consistent with WESM Rules Clause 3.5.4.

The software testing for the Load Forecasting module assessed the accuracy of load forecasts at the nodal level for each process: Real-Time Dispatch (RTD), Hour-Ahead Projection (HAP), Day-Ahead Projection (DAP), and Week-Ahead Projection (WAP). This certificate covers only the DAP and WAP processes for the Luzon and Visayas regions. The accuracy of these forecasts were previously assigned a *Significant* risk rating, so that IES advised to not use DAP and WAP for commercial operations[1]. The DAP and WAP processes for Luzon and Visayas have undergone methodology improvements since the review in late 2019 and are the focus of this certificate.

This certificate certifies that the improved DAP and WAP forecasts for the Luzon and Visayas regions are consistent with the objective of providing accurate load forecasts[2].

CERTIFICATION TESTING METHODOLOGY

The scope of this software certification was to reassess the level of nodal demand forecasting accuracy[3] for the DAP and WAP processes in the Luzon and Visayas regions. We have carried out a re-assessment of the nodal demand forecast performance based on the period from 26/10/2019 to 25/01/2020 (Coverage Period) and therefore we have not assessed the performance for all months over a 1-year period[4]. The methodology used to certify that the load forecasts are consistent with the requirement to provide accurate net load forecasts (outlined in WESM Rules Clause 3.5.4) is consistent with the previous assessments and is summarised below.

---

[1] NMMS_C6b_Load_Forecasting_Certificate_Final_v06.pdf, 19 November 2019.

[2] A software certificate has already been issued for RTD and HAP process for Luzon and Visayas (19 Nov 2019). Assessment of the Mindanao Load forecasts will be covered in a separate report and certificate.

[3] The SCADA system data quality, ICCP system and other processes that determine the real-time data upon which the forecasts are computed are beyond the scope.

[4] Our assessments assume that the Coverage Period is a reasonable indicator of future performance.

1. Computing the forecast error metrics:
    - A forecast run will produce a forecast for each active node for each time-ahead period at a specific resolution. Each of these forecasts was compared with the actual snapshot load. For example: the 14:00 PM DAP run at 14/01/2020 produces forecasts for the hourly intervals from 15:00 PM of 14/01/2020 until 00:00 AM of 16/01/2020. This forecast is compared to the corresponding actual snapshot load for the hourly period ending at 15:00 PM of 14/01/2020 until 00:00 AM of 16/01/2020.
    - Metrics and distributions of the forecast errors was calculated based on the actual snapshot load and forecast load to provide point statistics (such as average) and to describe the load forecasting accuracy variations to identify whether there were any issues with bias in the forecasts. This process was repeated across all forecasts run during the Coverage Period.
2. Comparison against other forecasts for relative accuracy:
    - Where applicable, statistics of load forecasting accuracy were then compared to load forecast accuracy levels of the New Zealand Electricity Market (NZEM) for context and compared against the accuracy of the previous review of the Siemens NMMS[5].
    - We also compared the WAP forecast to a "naïve forecast" where we assume that the next week-ahead nodal forecast is equal to the previous week's nodal loads.
    - The metrics adopted are based on those used in other electricity markets to assess the accuracy of nodal demand forecasts. We calculate the same metrics for the Siemens NMMS forecasts as we do for the NZEM. We also reviewed the forecast within a Risk Rating Framework. This enables us to decide whether the load forecasting system accuracy is suitable for real-time use and to identify whether improvements are needed.
3. Risk Rating
    - Each of the process is given a level of importance based on the possible negative impact resulting from poor forecasting accuracy.
    - The probability that forecasts exceed an error threshold is calculated on each process by region, separated by different time-ahead categories.
    - An overall risk rating is achieved by weighting each time category with near-term forecasts having greater weighting as they are more important. The Risk Rating matrix, presented in the table below, forms the basis for our recommendation.

Risk Rating	Description
Low	Low probability of inaccuracy. Acceptable for NMMS to go live without IEMOP needing to make any further improvements.

[5] This was done for the DAP and WAP processes for Luzon and Visayas.

Risk Rating	Description
Medium	Medium probability of inaccuracy but acceptable for NMMS to go live. Will not materially impact participant decision-making in terms of market outcomes – i.e. magnitude of inaccuracies not significant.
Significant	High probability of inaccuracy and if used in the market there is a high risk that participant decision-making will be negatively impacted with poor results. Recommend improvements to be made before go live or an acceptable workaround be implemented.
Critical	Unacceptably high probability of errors and not suitable for use in the market without substantial improvements.

CERTIFICATION OF NMMS LOAD FORECASTING ACCURACY

The reassessment of the DAP and WAP forecasts in Luzon and Visayas show that improvements have been made, with forecasting errors reduced across the entire time horizon compared with the previous DAP and WAP Luzon and Visayas forecast results.

Both the DAP and WAP processes achieved a Low risk rating. Under these risk ratings, IES considers the DAP and WAP processes are suitable to go live.

We assume that the demand forecasting software and methodology that produced the results IEMOP provided to IES is a faithful representation of what would be implemented in practice. If any significant changes to the methodology are introduced then we cannot guarantee that the demand forecasting software would produce better or worse results compared to what we have assessed.

> *"As such we believe that the DAP and WAP forecasts are consistent with providing accurate load forecasts and are ready for commercial operations."*

LIMITATION OF LIABILITY

In furnishing this certification, Intelligent Energy Systems specifically limits its liability in accordance with Clause 5.08 (b) of the Contract for External Audit Services (Independent Software audit of the New Market Management System) dated 17 February 2017. No person shall be entitled to claim against Intelligent Energy Systems any losses or damage whether indirect, special or consequential, in excess of that limitation, and IEMOP shall ensure that all persons or parties who may rely on this certification are aware of this limitation of liability.

Yours sincerely,



Hugh Bannister
Chairman and CEO

IES
Intelligent Energy Systems

4 June 2020

Mr. Felixberto U. Bustos, Jr.
Chairman, PEM Audit Committee
Philippine Electricity Market Corporation
18/F Robinsons Equitable Tower
ADB Avenue, Ortigas Center
1600 Pasig City, Philippines

Dear Mr. Bustos

SCOPE OF THIS CERTIFICATE

The purpose of this software certificate issued by Intelligent Energy Systems (IES) relates to the Audit of the Enhancements to the New Market Management System (NMMS) and Central Registration and Settlement System (CRSS). The software testing specifically focused on accuracy of the Load Forecasting module for the Mindanao region consistent with requirements in WESM Rules Clause 3.5.4[1].

The software testing for the Load Forecasting module assessed the accuracy of load forecasts at the nodal level for each process: Real-Time Dispatch (RTD), Hour-Ahead Projection (HAP), Day-Ahead Projection (DAP), and Week-Ahead Projection (WAP).

This certificate certifies that the RTD, HAP, DAP and WAP forecasts for the Mindanao region is consistent with the objective of providing accurate nodal load forecasts.

CERTIFICATION TESTING METHODOLOGY

The scope of this software certification was to assess the level of nodal demand forecasting accuracy for the RTD, HAP, DAP and WAP processes for the Mindanao region[2]. We have carried out an assessment of the nodal demand forecast performance based on the period from 3 December 2019 to 3 March 2020 (Coverage Period) and therefore we have not assessed the performance for all months over a 1-year period[3]. The methodology used to certify that the nodal load forecasts are consistent with the requirement to provide accurate net load forecasts (outlined in WESM Rules Clause 3.5.4) is consistent with assessments of the Luzon and Visayas regions and is summarised below.

1. Computing the forecast error metrics:
    - A forecast run will produce a forecast for each active node for each time-ahead period at a specific resolution. Each of these forecasts was compared with the actual snapshot load. For example: the 14:00 PM DAP run at 01/14/2020 produces forecasts for the hourly intervals from 15:00 PM of 01/14/2020 until 00:00 AM of

[1] Software certificates have already been issued for the Luzon and Visayas regions.

[2] The SCADA system data quality, ICCP system and other processes that determine the real-time data upon which the forecasts are computed are beyond the scope.

[3] Our assessments assume that the Coverage Period is a reasonable indicator of future performance.

01/16/2020. This forecast is compared to the corresponding actual snapshot load for the hourly period ending at 15:00 PM of 01/14/2020 until 00:00 AM of 01/16/2020.

- Metrics and distributions of the forecast errors was calculated based on the actual snapshot load and forecast load to provide point statistics (such as average) and to describe the nodal load forecasting accuracy variations to identify whether there were any issues with bias in the forecasts. This process was repeated across all forecasts run during the Coverage Period.

2. Comparisons for relative accuracy:
    - Comparisons were made against a "naïve forecast" where we assume the nodal forecast is equal to the actuals from a suitable previous period accounting for the time required to access historical data.
    - The metrics that we have adopted are based on those that are used in other electricity markets to assess the accuracy of demand forecasts. We calculate the same metrics for the Siemens NMMS forecasts, as we do for other selected electricity markets (New Zealand). This enables us to form a view on whether the nodal load forecast accuracy is suitable for real-time use and to identify whether improvements are needed.
3. Risk Rating
    - Each of the processes is given a level of importance based on the possible negative impact resulting from poor forecasting accuracy.
    - The probability that forecasts exceed an error threshold is calculated for each process by region, separated by different time-ahead categories.
    - An overall risk rating is achieved by weighting each time category with near-term forecasts having greater weighting as they are more important. The Risk Rating matrix, presented in the table below, forms the basis for our recommendation.

Risk Rating	Description
Low	Low probability of inaccuracy. Acceptable for NMMS to go live without IEMOP needing to make any further improvements.
Medium	Medium probability of inaccuracy but acceptable for NMMS to go live. Will not materially impact participant decision-making in terms of market outcomes – i.e. magnitude of inaccuracies not significant.
Significant	High probability of inaccuracy and if used in the market there is a high risk that participant decision-making will be negatively impacted with poor results. Recommend improvements to be made before go live or an acceptable workaround be implemented.
Critical	Unacceptably high probability of errors and not suitable for use in the market without substantial improvements.

CERTIFICATION OF NMMS LOAD FORECASTING ACCURACY

The assessment of the RTD, HAP, DAP and WAP nodal load forecasts in Mindanao achieved a Low risk rating. Under these risk ratings, IES considers the RTD, HAP, DAP and WAP forecasts are suitable for use in the commercial operations of the New MMS.

We assume that the demand forecasting software and methodology that produced the results IEMOP provided to IES is a faithful representation of what would be implemented in practice. If any significant changes to the methodology are introduced then we cannot guarantee that the demand forecasting software would produce better or worse results compared to what we have assessed.

> *"As such we believe that the RTD, HAP, DAP and WAP forecasts are consistent with providing accurate load forecasts and are ready for commercial operations."*

LIMITATION OF LIABILITY

In furnishing this certification, Intelligent Energy Systems specifically limits its liability in accordance with Clause 5.08 (b) of the Contract for External Audit Services (Independent Software audit of the New Market Management System) dated 17 February 2017. No person shall be entitled to claim against Intelligent Energy Systems any losses or damage whether indirect, special or consequential, in excess of that limitation, and IEMOP shall ensure that all persons or parties who may rely on this certification are aware of this limitation of liability.

Yours sincerely,

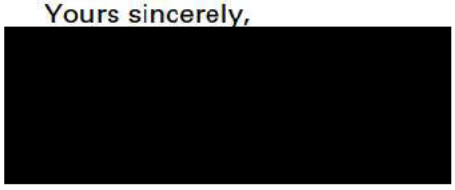

Hugh Bannister
Chairman and CEO

Appendix B – Software Certificates for Audit of CRSS modules and enhancements

IES
Intelligent Energy Systems

14 January 2020

Mr. Felixberto U. Bustos, Jr.
Chairman, PEM Audit Committee
Philippine Electricity Market Corporation
18/F Robinsons Equitable Tower
ADB Avenue, Ortigas Center
1600 Pasig City, Philippines

Dear Mr. Bustos

SCOPE OF THIS CERTIFICATE

The purpose of this software certificate is to confirm that the CRSS module is consistent with the rules set out in the relevant documents specified in each section below.

Software components of the CRSS module were tested, as follows:

- **Registration and Customer Switching:** The purpose of the software certification was to confirm that the CRSS modules are consistent with the criteria, guidelines and procedures in:
    - WESM Manual on Registration, Suspension and De-registration Criteria and Procedures Issue 5.0
    - Wholesale Electricity Spot Market Rules Change Committee Resolution No. 2019-02;
        - Annex B, Retail Rules, Contestable Customers, Clause 2.2.3;
        - Annex G, Retail Manual on Market Transactions Procedures;
            - GENERAL GUIDELINES AND SCOPE Section I-4.2;
            - TERMINATION OF RETAIL SUPPLY CONTRACTS IV - 2.2.2;
    - WESM Retail Manual on Registration Criteria and Procedures Issue 2.0; and
    - WESM Retail Manual on Market Transactions Procedures Issue 2.0.

  The scope of the software certification relates to the capability of the CRSS to facilitate the following processes:

    - **Registration,**
    - **Customer Switching,**
    - **Counterparty Confirmation,** and
    - **Supply Contract Enrolment.**

- **Submission of BCQ Declarations:** The purpose of the software certification was to confirm that the Bilateral Contract Quantities (BCQ) can be declared by the seller and

confirmed by the buyer as stipulated in the WESM Manual on Billing and Settlement Issue 6.0.

- **Meter Quantity (MQ) Data Upload and Meter Trouble Report (MTR) User Interface Enhancements:** The purpose of the software certification was to confirm

    - **MQ Uploading**: that the MQ is uploaded correctly; consistent with the WESM Manual Metering Standards and Procedures Issue 12.0; and Wholesale Electricity Spot Market Rules Change Committee Resolution No. 2019-02, Annex E, Retail Manual on Metering Standards and Procedures, Conversion to Dispatch Interval Data, 5.3.4.1 and 5.3.4.2.

    - **MTR User Interface Enhancements**: The scope also includes that the MTR user interface facilitates communication between the Market Operator (MO) and the Metering Services Providers (MSP).

- **Prudential Requirements (PR) Monitoring:** The purpose of the software certification was to confirm that the in-scope elements are consistent with the STATEMENT OF WORK 12 BUSINESS REQUIREMENTS: Prudential Requirements Interface, MTR Response Interface, BCQ and MQ Enhancements.

  The scope relates to relates to the following elements:

    - **Creation of Margin Calls,**
    - **Management of Prudential Securities,** and
    - **Monitoring of Prudential Requirements.**

CERTIFICATION TESTING METHODOLOGY

The registration tasks were tested interactively on the User Acceptance Interface (UAI) test system by IES. Access to the test system was provided by IEMOP.

The method used by IES to certify the logic and, where applicable, calculations of each was as follows:

- **Registration and Customer Switching:** IES independently verified the capability of the test system to carry out the following processes:

    - **Registration:** The registration process of several types of Trading Participants including Direct and Indirect customers was carried out on the test system.

    - **Customer Switching:** The switching of an indirectly registered customer following a SOLR event was carried out on the test system. Normal switching of indirect customers follows a subset of the SOLR process.

    - **Counterparty Confirmation:** Counterparty confirmation a requirement of registration was tested on the test system.

    - **Supply Contract Enrolment:** Supply contract enrolment and its prerequisite counterparty confirmation prior to enrolment were tested on the test system.

- **Submission of BCQ Declarations:** The test was carried out on the test system. IES uploaded valid BCQ submissions and resubmissions by a seller, and tested confirmation thereof on the test system.

- **Meter Quantity (MQ) Data Upload and Meter Trouble Report (MTR) Enhancements:**

    - **MQ uploading**: IES tested this on the production system through a sessional remote access facility provided by IEMOP. IES constructed and uploaded mock sample test data from 5 minute and 15 minute meters on CSV files. IES compared the data written into the database with the source data in the CSV files and the quantities matched. The data is uploaded correctly when the source is a CSV file. However, the data is not correctly uploaded when the source has is an MDE extension file.

    - **MTR User Interface Enhancements:** IES accessed the MTR user interface on the test system and verified that the MO can post reports which can be viewed by the MSP who is also able to select remarks from a dropdown menu. The MO is also able to change the status of a report from Open to Closed.

- **Prudential Requirements (PR) Monitoring:**

    IES followed the following method to verify the logic and, where applicable, the calculations involved in the following elements:

    - **Creation of Margin Calls:** IES independently checked the calculation of margin calls from data for the month of June 2019 provided by IEMOP. The margin calls calculations matched those performed by IEMOP. IES also checked that all the participants that appeared in the margin call report are registered as direct participants.
    - **Management of Prudential Securities:** IES checked the test system and found evidence that it is capable of generating reports relating to the status of prudential securities and of generating dashboard notification to participants of securities nearing expiry. IES also sighted evidence of a first notification report generated and emailed by the CRSS system sent to the IEMOP team.
    - **Monitoring of Prudential Requirements:** IES verified that the test system is capable of generating reports relating to prudential requirement levels for participants which facilitates the MO's task of the monitoring of prudential requirements.

CERTIFICATION OF CRSS SOFTWARE MODULE WITH RESPECT TO REFERENCE DOCUMENTATION

The following is our certification of the extent to which the CRSS modules are consistent with the relevant documents. Where testing was performed on the User Acceptance Interface (UAI) test system, the certificate is provided to the extent that the implementation of the production system is identical with that on the User Acceptance Interface (UAI) test system. The certification does not extend to the manual tasks and processes associated with the audited processes or to the timeliness with which the processes are carried out.

"We believe that the logic and, where applicable, the calculations of the software components of the CRSS module referred to above are consistent with the logic and calculations specified in:

*For **Registration and Customer Switching**:*

- *WESM Manual on Registration, Suspension and De-registration Criteria and Procedures Issue 5.0*
  - *Wholesale Electricity Spot Market Rules Change Committee Resolution No. 2019-02;*
    - *Annex B, Retail Rules, Contestable Customers, Clause 2.2.3;*
    - *Annex G, Retail Manual on Market Transactions Procedures;*
      - *GENERAL GUIDELINES AND SCOPE Section I-4.2;*
      - *TERMINATION OF RETAIL SUPPLY CONTRACTS IV - 2.2.2;*
- *WESM Retail Manual on Registration Criteria and Procedures Issue 2.0; and*
- *WESM Retail Manual on Market Transactions Procedures Issue 2.0.*

*For **Submission of BCQ Declarations:** WESM Manual on Billing and Settlement Issue 6.0*

*For **Meter Quantity (MQ) Data Upload and Meter Trouble Report (MTR) User Interface Enhancements:***

- *WESM Manual Metering Standards and Procedures Issue 12.0; and*
- *Wholesale Electricity Spot Market Rules Change Committee Resolution No. 2019-02, Annex E, Retail Manual on Metering Standards and Procedures, Conversion to Dispatch Interval Data, 5.3.4.1 and 5.3.4.2.*

*For **Prudential Requirements (PR) Monitoring:** STATEMENT OF WORK 12 BUSINESS REQUIREMENTS: Prudential Requirements Interface, MTR Response Interface, BCQ and MQ Enhancements."*

LIMITATION OF LIABILITY

In furnishing this certification, Intelligent Energy Systems specifically limits its liability in accordance with Clause 5.08 (b) of the Contract for External Audit Services (Independent Software audit of the New Market Management System) dated 17 February 2017. No person shall be entitled to claim against Intelligent Energy Systems, any losses or damage whether

indirect, special or consequential, in excess of that limitation and PEMC shall ensure that all persons or parties who may rely on this certification are aware of this limitation of liability.

Yours sincerely



Charles Hugh Bannister
Chairman and CEO

IES
Intelligent Energy Systems

16 March 2020

Mr. Felixberto U. Bustos, Jr.
Chairman, PEM Audit Committee
Philippine Electricity Market Corporation
18/F Robinsons Equitable Tower
ADB Avenue, Ortigas Center
1600 Pasig City, Philippines

Dear Mr. Bustos,

SCOPE OF THIS CERTIFICATE

The purpose of this software certificate is to confirm that the Central Registration and Settlement System (CRSS) module is consistent with the rules set out in the relevant documents specified in each section below.

Software components of the CRSS module were tested, as follows:

- **Separate Settlements for Mindanao:** The purpose of the software certification was to confirm that Mindanao has separate metering and is settled separately until which time it is connected to the main grid with Luzon and Visayas in accordance with the DOE Circular No. DC2018-06-0017. As part of this audit, IES also verifies the BCQ declarations within the CRSS conform to the circular. In addition, the settlement values are also verified to be consistent with the criteria, guidelines and procedures in the WESM Manual on Price Determination Methodology Issue No. 2.0 and STATEMENTS OF WORK 10, 12 and 13.
- **Settlement Statements:** The purpose of the software certification was to confirm that the settlement values from the CRSS module is correctly transferred to the Account Management System (AMS) tables. This also certifies that the settlement statements, which are generated as part of the CRSS Settlement and Billing Core functions, are properly generated from the corresponding data in the AMS in accordance with STATEMENTS OF WORK 9, 10, 12 and 13.

TESTING METHODOLOGY USED FOR SOFTWARE CERTIFICATION

The method used by IES to certify the logic and, where applicable, calculations of each was as follows:

- **Separate Settlements for Mindanao:** The approach taken was for IES to independently calculate settlement values based on provided inputs to compare it to the outputs from the system. This was performed for a simple test system (provided by IEMOP) which included generator and customers in all regions. The test system data included both inputs and settlement outputs of the system, and IES independently verified the calculations in accordance with the reference documents for the CRSS Settlement Module. The overall process involved the following:

- IES reviewed the reference documentation to familiarise with the mathematical formulation for each settlement variable/item.
- IES used the provided settlement test data to independently calculate the settlement-related items such as the distribution of NSS, VAT and line rental and compared them to the given outputs of the settlement test data.
- BCQ declarations were tested within the CRSS system and confirmed using witness testing with IEMOP performing the walkthrough and IES asking for test cases to be run.
- The check of the metering calculation requirements for generators sharing a single metering point is included in Report 2: CRSS Modules & Enhancements. The metering inputs into the settlement system have already accounted for this prior to any calculations.

- **Settlement Statements:** IEMOP provided IES with a snapshot taken from the CRSS module and the AMS tables, as well as, a sample of settlement statement reports from different resources. Using the provided information IES did the following:
  - Validate the billing information between the CRSS and AMS databases to ensure the values in the AMS tables are consistent with the CRSS tables.
  - Compare the generated billing statements with the corresponding values found in the AMS tables to ensure the statements are referring to the correct figures in the data.

CERTIFICATION OF CRSS SOFTWARE MODULES

The audit results for each CRSS module is as follows:

- **Separate Settlements for Mindanao:** The audit results confirm that the Mindanao is settled separately from Luzon and Visayas and BCQ declarations for Mindanao are separate, in accordance with DOE Circular No. DC2018-06-0017. The review also certifies that with these enhancements, the settlements module correctly calculates settlement values consistent with the formulations found in the documents WESM Manual on Price Determination Methodology Issue No. 2.0 and STATEMENTS OF WORK 10, 12 and 13.

- **Settlement Statements:** The audit results show that the settlement data are consistent between the CRSS and AMS, and that the generated billing statements refer to the correct figures within the AMS data.

"We believe that the logic and calculations for the settlement calculations follow the relevant manuals and documentation, with Mindanao settlements independent of Luzon and Visayas.

The generated settlement statements are correctly using the correct figures corresponding to the trading participants found in the AMS database."

LIMITATION OF LIABILITY

In furnishing this certification, Intelligent Energy Systems specifically limits its liability in accordance with Clause 5.08 (b) of the Contract for External Audit Services (Independent Software audit of the New Market Management System) dated 17 February 2017, and that no person shall be entitled to claim against Intelligent Energy Systems, any losses or damage whether indirect, special or consequential, in excess of that limitation, and PEMC shall ensure that all persons or parties who may rely on this certification are aware of this limitation of liability.

Yours sincerely



Hugh Bannister
Chairman and CEO

Appendix C – Software Certificates for Software/Tools/Applications enhancements

IES
Intelligent Energy Systems

14 January 2020

Mr. Felixberto U. Bustos, Jr.
Chairman, PEM Audit Committee
Philippine Electricity Market Corporation
18/F Robinsons Equitable Tower
ADB Avenue, Ortigas Center
1600 Pasig City, Philippines

Dear Mr. Bustos,

SCOPE OF THIS CERTIFICATE

The purpose of this software certificate is to confirm that the Interim Metering Macro Tools (IMMT) used in calculating the Site Specific Loss Adjustment factors (SSLA) are still functioning correctly following the change from using 15-minute interval data to 5-minute interval data. The audit findings certify that the calculations for the active energy loss at 5-minute intervals are correctly calculated in reference to *WESM Rules Change Committee Resolution No. 2019-02* and *WESM Manual Metering Standards and Procedures Issue 12.0*.

TESTING METHODOLOGY USED FOR SOFTWARE CERTIFICATION

For the WESM meter losses, IES checked the calculation of the losses for the one hour and 5-minute frequency for a sample of trading nodes. For a given trading node, the calculations follow exactly the same method and use the same formulas regardless of whether they are based on hourly or on 5-minute interval data; the only difference is the data that is used as input to the calculations.

IES noted a difference in results between energy loss calculated based on data aggregated to one hour (the current arrangement) and the sum of the energy losses calculated every 5-minutes over the corresponding hour. IES developed a model that explains the reason for the difference and that the 5 minute calculation improved accuracy. For the 5-minute calculation the test included both

- readings from 15-minute meters divided by three (3) to obtain 5-minute energy values, and
- readings from actual 5-minute meters.

For the RCOA losses IES was provided with sessional remote access to the system which enabled running the RCOA allocation on the production system. The data from 26 July 2019 was used as a sample.

CERTIFICATION OF IMMT WITH RESPECT TO REFERENCE DOCUMENTATION

The audit results show that:

- The difference in the SSLA calculations resulting from using 5-minute or 15-minute data is due to the natural variability in the data, and the tool does correctly calculate the SSLA.
- IES has verified that the sharing of energy losses is in accordance with Clause 8.7.3 of the 'Metering Standards and Procedures, WESM-MSDM-MM-12'.
- The RCOA data retrieved using a manual query was confirmed to be correct.
- Losses are allocated to captive customers in accordance with Department of Energy Circular No. DC2018-04-0009 "Adopting Further Amendments to the Retail Rules and its Market Manual on Metering Standards and Procedures for the Implementation of Enhancements to WESM Design and Operations".

LIMITATION OF LIABILITY

In furnishing this certification, Intelligent Energy Systems specifically limits its liability in accordance with Clause 5.08 (b) of the Contract for External Audit Services (Independent Software audit of the New Market Management System) dated 17 February 2017. No person shall be entitled to claim against Intelligent Energy Systems, any losses or damage whether indirect, special or consequential in excess of that limitation and PEMC shall ensure that all persons or parties who may rely on this certification are aware of this limitation of liability.

Yours sincerely

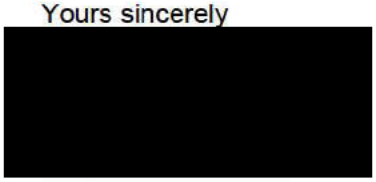

Charles Hugh Bannister
Chairman and CEO

IES
Intelligent Energy Systems

22 May 2020

Mr. Felixberto U. Bustos, Jr.
Chairman, PEM Audit Committee
Philippine Electricity Market Corporation
18/F Robinsons Equitable Tower
ADB Avenue, Ortigas Center
1600 Pasig City, Philippines

Dear Mr. Bustos,

SCOPE OF THIS CERTIFICATE

The purpose of this software certificate is to confirm that the two parts of the Trading Operations Central Management System (TOCMS): (1) Nodal Load Distribution Factors (NLDF) and (2) Very Short Term Load Forecasting (VSTLF) have correctly implemented the calculations and logic in accordance with the *TOCMS Technical Design Specifications Document*[1] and that the results of NLDF and VSTLF calculations are transferred to the NMMS environment. The findings of the audit certify that the calculations for the NLDF and VSTLF are done correctly and is consistent with the *TOCMS Technical Design Specifications Document*.

TESTING METHODOLOGY USED FOR SOFTWARE CERTIFICATION

The method used by IES to certify the logic and calculations of each TOCMS module is as follows:

- **Nodal Load Distribution Factor:**
    - **NLDF Updates:** We designed different test cases to ensure that the NLDF are correctly calculated for different scenarios. For each test case, using the data given by IEMOP, IES independently calculated the NLDF values and compared it with the TOCMS values.
    - **NLDF TOCMS to NMMS Transfer:** This was done via witness testing. The approach was to check that data in the Live NLDF Table of the TOCMS would be transferred to the appropriate NMMS database tables. Given that a large volume of information is transferred from TOCMS to NMMS, we also ran consistency checks based on data extracts of the sent and received data within the two systems.
- **Very Short Term Load Forecasting**
    - **VSTLF Calculations:** We designed test cases to test the calculation of the VSTLF and possible user modifications to the calculations. For each test

[1] Enhanced TOCMS Technical Design Specifications Document_v0.3_clean.pdf

case, we manually calculate the expected VSTLF values using data provided by IEMOP and compared them with values from the VSTLF interface.

- **VSTLF TOCMS to NMMS Transfer:** This was done via witness testing. The approach was to check that the data in the CSV files written in the appropriate form (by TOCMS) would be transferred to the NMMS-Forecast Applications' STLF module and was subsequently reflected.

CERTIFICATION OF TOCMS SOFTWARE MODULES

The audit results show that the TOCMS modules, NLDF and VSTLF, and the transfer from the TOCMS to the NMMS environment are functioning properly. The following table is the overall conclusion of the TOCMS testing that we have carried out:

No.	Name	Test	Result	Comment
TOCMS#01	NLDF Updates	Task 1-1: NLDF Updates #1	Pass	
		Test 1-2: NLDF Updates #2	Pass	
		Test 1-3: NLDF Updates #3	Pass	
		Test 1-4: NLDF Updates #4	Pass	
		Test 1-5: NLDF Updates #5	Pass	
TOCMS#02	VLSTF Calculations	Task 2-1: Automatic	Pass	
		Test 2-2: Automatic (Weekend)	Pass	
		Test 2-3: Change Base Curves (Luzon)	Pass	
		Test 2-4: Change Base Curves (Visayas)	Pass	
		Test 2-5: Manual Scale Factors (Luzon)	Pass	
		Test 2-6: Manual Scale Factors (Visayas)	Pass	
		Test 2-7: Manual Increment (Luzon)	Pass	
		Test 2-8: Manual Increment (Visayas)	Pass	
		Test 2-9: Latest Snapshot Data	Pass	
		Test 2-10: Pin Functionality	Pass	
		Test 2-11: Change Base Curve (Custom)	Pass	
		Test 2-12: Manual Increment	Pass	
TOCMS#03	TOCMS Internal Transfers	Test 3-1: NLDF Transfer #1	Pass	
		Test 3-2: NLDF Transfer #2	Pass	
		Test 3-3: NLDF Transfer #3	Pass	
		Test 3-4: NLDF Transfer #4	Pass	
		Test 3-5: NLDF Transfer #5	Pass	
		Test 3-6: NLDF Transfer #6	Pass	
	Transfer NLDFs from TOCMS to NMMS	Test 3-7: Witness Test of Transfer of NLDFs from TOCMS to the NMMS	Pass	
		Test 3-8: WAP Data Consistency Check	Pass	
		Test 3-9: DAP Data Consistency Check	Pass	
		Test 3-10: HAP Data Consistency Check	Pass	
		Test 3-11: RTD Data Consistency Check	Pass	
TOCMS#04	VSTLF to NMMS Transfer	Test 4-1: Testing of the transfer of TOCMS VSTLF results to the NMMS	Pass	

"The testing results for all test cases have passed and we believe that the NLDF and VSTLF modules of the TOCMS meets the functional requirements as presented in the TOCMS Technical Design Specifications Document."

LIMITATION OF LIABILITY

In furnishing this certification, Intelligent Energy Systems specifically limits its liability in accordance with Clause 5.08 (b) of the Contract for External Audit Services (Independent Software audit of the New Market Management System) dated 17 February 2017, and that no person shall be entitled to claim against Intelligent Energy Systems, any losses or damage whether indirect, special or consequential, in excess of that limitation, and PEMC shall ensure that all persons or parties who may rely on this certification are aware of this limitation of liability.

Yours sincerely



Hugh Bannister
Chairman and CEO